EMBRAER

ERJ140

EMBRAER S.A.
Av. Brigadeiro Faria Lima, 2170 - Putim
CEP 12227-901 São José dos Campos/SP - Brasil
http://www.embraer.com

AIRPORT PLANNING MANUAL

In connection with the use of this document, Embraer does not provide any express or implied warranties and expressly disclaims any warranty of merchantability or fitness for a particular purpose.
This document contains trade secrets, confidential, proprietary information of Embraer and technical data subject to U.S. Export Administration Regulation(″EAR″) and other countries export control laws and regulations. Diversion contrary to the EAR and other laws and regulations is strictly forbidden. The above restrictions may apply to data on all pages of this document.

APM-145/1521
10 OCTOBER 2001
REVISION 8 - 29 NOVEMBER 2024

Copyright ® 2024 by EMBRAER S.A. All rights reserved.

TO: HOLDERS OF THE PUBLICATION No. A.P.M. 145/1521 - ″AIRPORT PLANNING MANUAL″, APPLICABLE TO EMB-135 AIRCRAFT MODELS.

REVISION 8 DATED NOVEMBER 29/24

HIGHLIGHTS

Pages which have been added, revised or deleted by the current revision are indicated by an asterisk, on the List of Effective Pages.
Remove and insert the affected pages as listed and enter this revision to the Record of Revision Sheet.
This issue incorporates all preceding Temporary Revisions (if any).

RECORD OF REVISIONS

REV No.	ISSUE DATE	DATE INSERTED	BY	REV No.	ISSUE DATE	DATE INSERTED	BY

RETAIN THIS RECORD IN THE FRONT OF MANUAL OR CHAPTER.
ON RECEIPT OF REVISIONS, INSERT REVISED PAGES IN THE MANUAL, AND ENTER REVISION NUMBER, DATE INSERTED AND INITIALS.

RECORD OF TEMPORARY REVISIONS

REV. No.	DATE INSERTED	DATE REMOVED	PAGE NUMBER	REV. No.	DATE INSERTED	DATE REMOVED	PAGE NUMBER

SERVICE BULLETIN LIST

SERVICE BULLETIN		MANUAL	
NUMBER	REV. No.	REV. No.	ISSUE DATE

SERVICE BULLETIN		MANUAL	
NUMBER	REV. No.	REV. No.	ISSUE DATE

LIST OF EFFECTIVE PAGES

Original ..... Oct 10/01
Revision A ..... Apr 30/02
Revision B ..... Oct 21/02
Revision C ..... May 28/03
Revision D ..... Jan 21/04
Revision E ..... Aug 10/04
Revision F ..... Sep 28/05
Revision 7 ..... Sep 23/19
Revision 8 ..... Nov 29/24
* Title ..... Nov 29/24
List of Effective Pages
* 1 ..... Nov 29/24
* 2 ..... Nov 29/24
Table of Contents
1 ..... Sep 23/19
* 2 ..... Nov 29/24
* 1-1 ..... Nov 29/24
1-2 ..... Sep 23/19
2-1 ..... Sep 23/19
2-2 ..... Sep 23/19
2-3 ..... Sep 23/19
2-4 ..... Sep 23/19
2-5 ..... Sep 23/19
2-6 ..... Sep 23/19
2-7 ..... Sep 23/19
2-8 ..... Sep 23/19
2-9 ..... Sep 23/19
2-10 ..... Sep 23/19
2-11 ..... Sep 23/19
2-12 ..... Sep 23/19
2-13 ..... Sep 23/19
2-14 ..... Sep 23/19
3-1 ..... Sep 23/19
3-2 ..... Sep 23/19
3-3 ..... Sep 23/19
3-4 ..... Sep 23/19
3-5 ..... Sep 23/19
3-6 ..... Sep 23/19
4-1 ..... Sep 23/19
4-2 ..... Sep 23/19
4-3 ..... Sep 23/19
4-4 ..... Sep 23/19
4-5 ..... Sep 23/19
4-6 ..... Sep 23/19
4-7 ..... Sep 23/19
4-8 ..... Sep 23/19
5-1 ..... Sep 23/19
5-2 ..... Sep 23/19
5-3 ..... Sep 23/19
5-4 ..... Sep 23/19
5-5 ..... Sep 23/19
5-6 ..... Sep 23/19
5-7 ..... Sep 23/19
5-8 ..... Sep 23/19
5-9 ..... Sep 23/19
5-10 ..... Sep 23/19
5-11 ..... Sep 23/19
5-12 ..... Sep 23/19
5-13 ..... Sep 23/19
5-14 ..... Sep 23/19
6-1 ..... Sep 23/19
6-2 ..... Sep 23/19
6-3 ..... Sep 23/19
6-4 ..... Sep 23/19
6-5 ..... Sep 23/19
6-6 ..... Sep 23/19
6-7 ..... Sep 23/19
6-8 ..... Sep 23/19
6-9 ..... Sep 23/19
6-10 ..... Sep 23/19
6-11 ..... Sep 23/19
6-12 ..... Sep 23/19
7-1 ..... Sep 23/19
7-2 ..... Sep 23/19
7-3 ..... Sep 23/19
7-4 ..... Sep 23/19
7-5 ..... Sep 23/19
7-6 ..... Sep 23/19
7-7 ..... Sep 23/19
7-8 ..... Sep 23/19
7-9 ..... Sep 23/19
7-10 ..... Sep 23/19
7-11 ..... Sep 23/19
7-12 ..... Sep 23/19
7-13 ..... Sep 23/19
7-14 ..... Sep 23/19
7-15 ..... Sep 23/19
7-16 ..... Sep 23/19
7-17 ..... Sep 23/19
7-18 ..... Sep 23/19
7-19 ..... Sep 23/19
7-20 ..... Sep 23/19
7-21 ..... Sep 23/19
7-22 ..... Sep 23/19

Pages revised or added by the current revision are indicated by an asterisk (*). Pages deleted by the current revision are indicated by * (del).Pages deleted by the previous revision are indicated by (del).

LIST OF EFFECTIVE PAGES

	7-23	Sep 23/19
*	7-24	Nov 29/24
*	7-25	Nov 29/24
*	7-26	Nov 29/24
*	7-27	Nov 29/24
*	7-28	Nov 29/24
*	7-29	Nov 29/24
*	7-30	Nov 29/24
	8-1	Sep 23/19
	8-2	Sep 23/19
	9-1	Sep 23/19
	9-2	Sep 23/19
	9-3	Sep 23/19
	9-4	Sep 23/19
	9-5	Sep 23/19
	9-6	Sep 23/19

Pages revised or added by the current revision are indicated by an asterisk (*). Pages deleted by the current revision are indicated by * (del).Pages deleted by the previous revision are indicated by (del).

TABLE OF CONTENTS

Section		Page
1.	**INTRODUCTION**	1-1
1.1	Purpose	1-1
1.2	Scope	1-1
2.	**AIRPLANE DESCRIPTION**	2-1
2.1	General Airplane Characteristics	2-1
2.2	Airplane Dimensions	2-2
2.3	Ground Clearances	2-4
2.4	Interior Arrangements	2-5
2.5	Passenger Cabin Cross-Section	2-10
2.6	Lower Compartment Containers	2-11
2.7	Door Clearances	2-12
3.	**AIRPLANE PERFORMANCE**	3-1
3.1	General Information	3-1
3.2	Payload x Range	3-2
3.3	FAR Takeoff Runway Length Requirements	3-4
3.4	FAR Landing Runway Length Requirements	3-6
4.	**GROUND MANEUVERING**	4-1
4.1	General Information	4-1
4.2	Turning Radii - No Slip Angle	4-2
4.3	Minimum Turning Radii	4-3
4.4	Visibility from Cockpit in Stationary Position	4-4
4.5	Runway and Taxiway Turn Paths	4-5
4.6	Runway Holding Bay	4-8
5.	**TERMINAL SERVICING**	5-1
5.1	General Information	5-1
5.2	Air Terminal Operation - Turnaround Station	5-4
5.3	Air Terminal Operation - Enroute Station	5-5
5.4	Ground Servicing Connections	5-6
5.5	Engine Starting Pneumatic Requirements	5-10
5.6	Ground Pneumatic Power Requirements	5-12
5.7	Conditioned Air Requirements	5-13
5.8	Ground Towing Requirements	5-14
6.	**OPERATING CONDITIONS**	6-1
6.1	Engine Exhaust Velocities and Temperatures	6-2
6.2	Airport and Community Noise	6-8
6.3	Hazard Areas	6-11
7.	**PAVEMENT DATA**	7-1
7.1	General Information	7-1
7.2	Footprint	7-4
7.3	Maximum Pavement Loads	7-5
7.4	Landing Gear Loading on Pavement	7-6

TABLE OF CONTENTS

Section **Page**

7.5 Flexible Pavement Requirements - U.S. Army Corps of Engineers Design Method . 7-7
7.6 Flexible Pavement Requirements - LCN Method 7-9
7.7 Rigid Pavement Requirements - Portland Cement Association Design Method 7-11
7.8 Rigid Pavement Requirements - LCN Method 7-13
7.9 ACN/PCN Reporting System - Flexible and Rigid Pavements 7-19
7.10 ACR - PCR METHOD 7-24
7.11 ACR Calculation for EMB-135 KL 7-27

8. POSSIBLE EMB-135 DERIVATIVE AIRPLANES 8-1

9. EMB-135 SCALE DRAWINGS 9-1
9.1 EMB-135 Scale: 1 Inch Equals 32 Feet 9-2
9.2 EMB-135 Scale: 1 Inch Equals 50 Feet 9-3
9.3 EMB-135 Scale: 1 Inch Equals 100 Feet 9-4
9.4 EMB-135 Scale: 1 to 500 9-5
9.5 EMB-135 Scale: 1 to 1000 9-6

1. INTRODUCTION

1.1 Purpose

This document provides airplane characteristics data for general airport planning. Since the operational practices vary among the airlines, specific data should be coordinated with the using airlines before the facility design is made.

EMBRAER should be contacted for any additional information required.

1.2 Scope

This document complies with NAS3601, revision 6.

This Manual is applicable to the aircraft models listed in the table below. This table provides a cross-reference between marketing and certification designations.

Table 1.2.1 - Aircraft Designations

Aircraft Marketing Designation	Aircraft Certification Designation
EMB-140ER ERJ-140ER RJ-140ER	EMB-135KE
EMB-140LR ERJ-140LR RJ-140LR	EMB-135KL

It provides characteristics for airport operators, airlines, and engineering consultant organizations. Since the airplane changes and available options may alter the information, the data presented herein must be regarded as subject to change.

Queries concerning any printed material, including purchasing, copying, shipping and handling, complaints, or compliments can be addressed to:

- Technical Publications Distribution:
  http://www.embraer.com
  e-mail: distrib@embraer.com.br

For support regarding technical information contained in non-operational publication, please contact:

- Embraer Customer Support Service.
  e-mail: rts@embraer.com.br

For Digital Technical Publications support:

- e-mail: support@flyembraer.com

THIS PAGE LEFT BLANK INTENTIONALLY

2. AIRPLANE DESCRIPTION

2.1 General Airplane Characteristics

The airplane is an all-metal semimonocoque-type structure, low-winged, T-tailed, pressurized airplane featuring a retractable twin-wheeled, tricycle-type landing gear system and two high bypass ratio rear-mounted Rolls Royce AE 3007 turbofan engines. The airplane has convenient accommodations for a pilot, a copilot, and a flight observer. The typical passenger configuration consists of three seats abreast, with front galley and rear toilet. Accommodation for a second flight attendant is available as an option.

2.1.1 Definitions

Maximum Design Taxi Weight (MTW): Maximum weight for ground maneuver as limited by the airplane strength and airworthiness requirements. (It includes weight of taxi and run-up fuel).

Maximum Design Landing Weight (MLW): Maximum weight for landing as limited by the airplane strength and airworthiness requirements.

Maximum Design Takeoff Weight (MTOW): Maximum weight for takeoff as limited by the airplane strength and airworthiness requirements. (This is the maximum weight at the start of the takeoff run).

Operating Empty Weight (OEW): Weight of the structure, power plant, furnishings, systems, unusable fuel, and other unusable propulsion agents, as well as other items of equipment that are considered an integral part of a particular airplane configuration. Also included are crew and crew baggage, navigation kit, and supplies necessary for full operations, excluding usable fuel and payload.

Maximum Design Zero Fuel Weight (MZFW): Maximum weight allowed before usable fuel and other specified usable agents are loaded in defined sections of the airplane as limited by the strength and airworthiness requirements.

Maximum Payload: Maximum design zero fuel weight minus operational empty weight.

Maximum Seating Capacity: The maximum number of passengers specifically certified or anticipated for certification.

Maximum Cargo Volume: The maximum space available for cargo.

Usable Fuel: Fuel available for the airplane propulsion.

Table 2.1.1.1 - Airplane General Characteristics

DESIGN WEIGHTS		AIRPLANE MODELS	
		KE	KL
Maximum Design Taxi Weight (MTW)	Kg (lb)	20200 (44533)	21200 (46738)
Maximum Design Landing Weight (MLW)	Kg (lb)	18700 (41226)	18700 (41226)
Maximum Design Takeoff Weight (MTOW)	Kg (lb)	20100 (44312)	21100 (46517)
Operating Empty Weight (OEW) [1]	Kg (lb)	11816 (26050)	11808 (26032)
Maximum Design Zero Fuel Weight (MZFW)	Kg (lb)	17100 (37699)	17100 (37699)
Maximum Payload [1]	Kg (lb)	5284 (11648)	5292 (11666)
Maximum Seating Capacity	Passenger	44	44
Maximum Cargo Volume	m^3 (ft^3)	9.2 (325)	9.2 (325)
Usable Fuel [2]	kg (lb)	4173 (9200)	5187 (11435)
	Liters (US gal.)	5146 (1360)	6396 (1690)

[1] Standard configuration (weights may vary according to optional equipment installed or interior layouts).

[2] Adopted fuel density of 0.811 kg/l (6.77 lb/US gal).

2.2 Airplane Dimensions

2.2.1 External Dimensions

Overall span ..... 20.04 m (65 ft 9 in)
Height (maximum) ..... 6.76 m (22 ft 2 in)
Overall length ..... 28.45 m (93 ft 5 in)

2.2.2 Wing

Reference area ..... 51.18 m^2 (551 ft^2)
Reference aspect ratio 7.8

2.2.3 Fuselage

Total Length ..... 26,51 m (87 ft 0 in)
Length of pressurized section ..... 19.67 m (64 ft 6 in)
Outside diameter ..... 2.28 m (7 ft 6 in)

2.2.4 Horizontal Tail

Span ..... 7.55 m (24 ft 9 in)
Area ..... 11.20 m^2 (120.6 ft^2)

2.2.5 Vertical Tail

Reference area ..... 7.20 m^2 (77.5 ft^2)

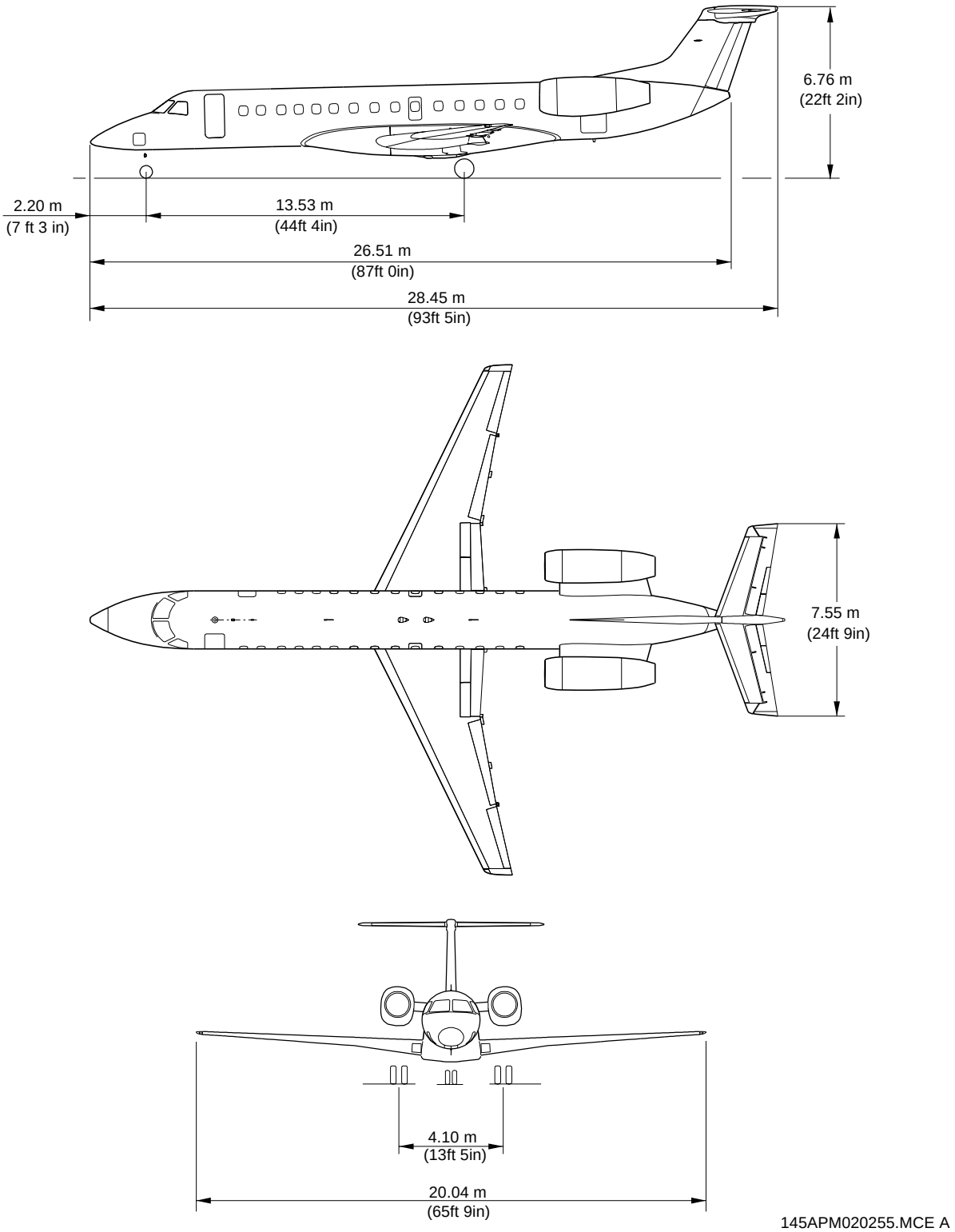

Figure 2.2.1 - Airplane General Dimensions

2.3 Ground Clearances

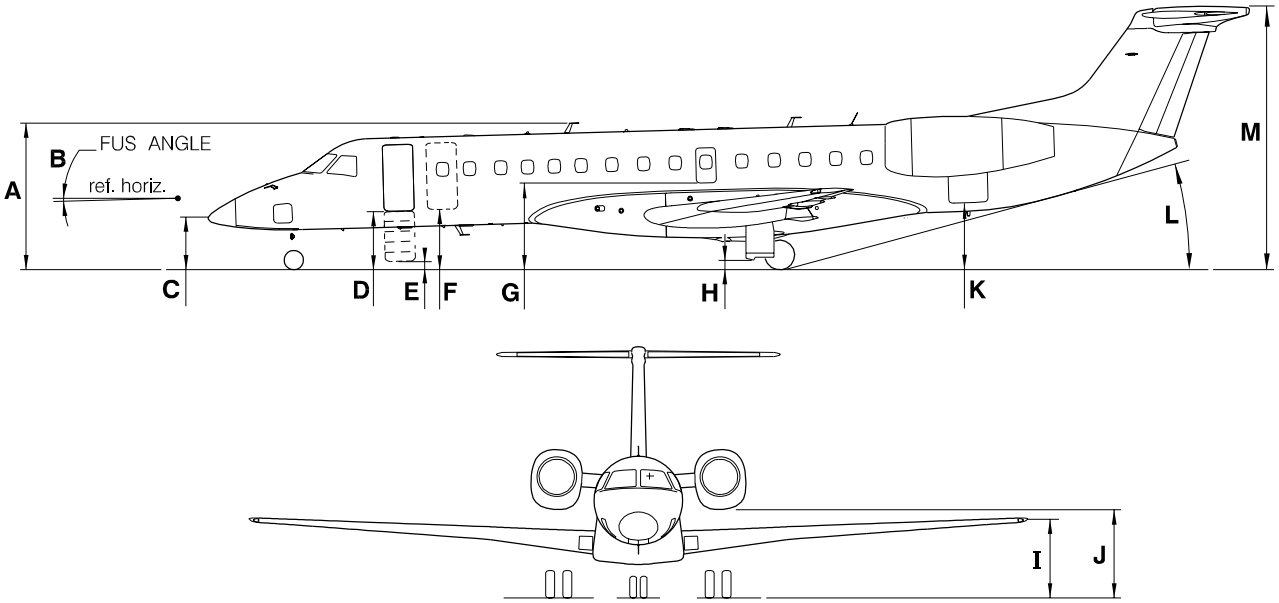

WEIGHT kg (lb)	CG (%) (%mac)	A ANTENNA	B FUS. ANGLE (deg)	C NOSE	D MAIN. DOOR	E OPEN 1ST.STEP	F EMERG./ SER.DOOR	G EMERG. EXIT	H MLG DOOR	I WING TIP	J NACELLE	K BAGGAGE DOOR	L TAILSKID ANGLE (deg)	M TAIL BOOM
21200kg (46738 lb)	20.0 %	3.738m 12ft 3in	−1.3600	1.3074m 4ft 3in	1.4822m 4ft 10in	0.2897m 11.40in	1.4836m 4ft 10in	2.1984m 7ft 3in	0.3354m 1ft 1in	1.9312m 6ft 4in	2.3397m 7ft 8in	1.6932m 5ft 7in	12.98	6.6844m 22ft 11in
21200kg (46738 lb)	38.5 %	3.750m 12ft 4in	−1.1700	1.3529m 4ft 5in	1.5082m 4ft 11in	0.3110m 1ft 3in	1.5119m 5ft	2.1940m 7ft 2in	0.3225m 1ft 1in	1.8835m 6ft 2in	2.3096m 7ft 7in	1.6666m 5ft 6in	12.75	6.6418m 22ft 9in
21100kg (46518 lb)	20.0 %	3.739m 12ft 4in	−1.3600	1.3077m 4ft 3in	1.4826m 4ft 10in	0.2902m 11.42in	1.4840m 4ft 10in	2.1991m 7ft 3in	0.3361m 1ft 1in	1.9319m 6ft 4in	2.3395m 7ft 8in	1.6941m 5ft 7in	12.99	6.6854m 22ft 11in
21100kg (46518 lb)	38.5 %	3.751m 12ft 4in	−1.1700	1.3533m 4ft 5in	1.5082m 4ft 11in	0.3101m 1ft	1.5131m 5ft	2.1940m 7ft 2in	0.3217m 1ft 1in	1.8775m 6ft 2in	2.3091m 7ft 7in	1.6671m 5ft 6in	12.76	6.6429m 22ft 10in
20200kg (44533 lb)	20.0 %	3.744m 12ft 3in	−1.3700	1.3106m 4ft 4in	1.4867m 4ft 11in	0.2942m 11.58in	1.4884m 4ft 10in	2.2053m 7ft 3in	0.3427m 1ft 2in	1.9389m 6ft 4in	2.3473m 7ft 8in	1.7021m 5ft 7in	13.06	6.6948m 22ft 11in
20200kg (44533 lb)	38.5 %	3.756m 12ft 4in	−1.1800	1.3572m 4ft 5in	1.5134m 5ft 0in	0.3161m 1ft	1.5175m 5ft	2.2009m 7ft 3in	0.3295m 1ft 1in	1.8903m 6ft 3in	2.3176m 7ft 7in	1.6749m 5ft 7in	12.82	6.6512m 22ft 10in
20100kg (44313 lb)	20.0 %	3.745m 12ft 4in	−1.3700	1.3109m 4ft 4in	1.4871m 4ft 11in	0.2947m 11.60in	1.4889m 4ft 10in	2.2061m 7ft 3in	0.3435m 1ft 2in	1.9397m 6ft 4in	2.3482m 7ft 8in	1.7031m 5ft 7in	13.06	6.6959m 22ft 12in
20100kg (44313 lb)	38.5 %	3.757m 12ft 4in	−1.1800	1.3577m 4ft 5in	1.5134m 5ft 0in	0.3152m 1ft	1.5187m 5ft	2.2009m 7ft 3in	0.3288m 1ft 1in	1.8842m 6ft 2in	2.3171m 7ft 7in	1.6754m 5ft 7in	12.82	6.6523m 22ft 10in
18700kg (41226 lb)	17.6 %	3.753m 12ft 4in	−1.4200	1.3112m 4ft 4in	1.4912m 4ft 11in	0.2988m 11.76in	1.4940m 4ft 11in	2.2171m 7ft 3in	0.3555m 1ft 2in	1.9531m 6ft 5in	2.3642m 7ft 9in	1.7197m 5ft 8in	13.20	6.7168m 22ft 1in
18700kg (41266 lb)	39.2 %	3.768m 12ft 4in	−1.1900	1.3673m 4ft 5in	1.5235m 5ft 0in	0.3255m 1ft 1in	1.5287m 5ft	2.2118m 7ft 3in	0.3399m 1ft 2in	1.8964m 6ft 5in	2.3286m 7ft 7in	1.6869m 5ft 6in	12.91	6.6642m 22ft 11in
17100kg (37699 lb)	16.1 %	3.764m 12ft 4in	−1.4600	1.3143m 4ft 4in	1.4982m 4ft 11in	0.3058m 12.03in	1.5020m 4ft 11in	2.2312m 7ft 4in	0.3706m 1ft 3in	1.9696m 6ft 5in	2.3834m 7ft 10in	1.7395m 5ft 8in	13.36	6.7412m 22ft 2in
17100kg (37699 lb)	41.0 %	3.782m 12ft 5in	−1.1700	1.3840m 4ft 6in	1.5431m 5ft 0in	0.3506m 1ft 2in	1.5404m 5ft 1in	2.2306m 7ft 4in	0.3637m 1ft 4in	1.9538m 6ft 5in	2.3505m 7ft 9in	1.7024m 5ft 8in	13.00	6.6755m 22ft 11in
15000kg (33069 lb)	14.0 %	3.782m 12ft 5in	−1.5300	1.3195m 4ft 4in	1.5094m 4ft 11in	0.3171m 1ft 1in	1.5148m 4ft 11in	2.2535m 7ft 5in	0.3944m 1ft 4in	1.9956m 6ft 6in	2.4135m 7ft 11in	1.7707m 5ft 10in	13.61	6.7793m 22ft 3in
13000kg (28660 lb)	14.0 %	3.804m 12ft 6in	−1.6000	1.3297m 4ft 4in	1.5254m 5ft 0in	0.3330m 1ft 1in	1.5322m 5ft	2.2799m 7ft 6in	0.4222m 1ft 4in	2.0254m 6ft 8in	2.4473m 8ft	1.8055m 5ft 11in	13.89	6.8206m 22ft 5in
13000kg (28660 lb)	41.0 %	3.827m 12ft 7in	−1.2300	1.4197m 4ft 8in	1.5832m 5ft 2in	0.3907m 1ft 3in	1.5817m 5ft 2in	2.2789m 7ft 6in	0.4131m 1ft 4in	2.0048m 6ft 7in	2.4046m 7ft 11in	1.7572m 5ft 9in	13.42	6.7355m 22ft 12in
12000kg (26455 lb)	30.0 %	3.827m 12ft 7in	−1.4500	1.3792m 4ft 6in	1.5623m 5ft 1in	0.3699m 1ft 2in	1.5658m 5ft 1in	2.2937m 7ft 6in	0.4328m 1ft 5in	2.0315m 6ft 8in	2.4447m 8ft	1.8007m 5ft 11in	13.81	6.8013m 22ft 4in

APM020254.MCE A

Figure 2.3.1 - Ground Clearances

2.4 Interior Arrangements

The standard interior arrangement provides accommodation for two pilots, one flight observer, one flight attendant, and 44 passengers. One additional flight attendant seat is available as an option. The standard and optional configurations are shown in figures 2.4.1 and 2.4.2.

2.4.1 Cockpit

The ″quiet and dark″ cockpit is designed to accommodate the pilots with comfort during all flight phases, with minimum workload and maximum safety. The cockpit is provided with two pilot seats, a foldable flight observer seat, control columns and pedals, control pedestal, left, right, and aft consoles, as well as main, overhead, circuit breaker, and glareshield panels. A sunshade is provided for each pilot and the compartment is separated from the passenger cabin by a partition with a lockable door.

2.4.1.1 Panels

The main instrument panel displays the main navigation, engine, and system indications, through the PFD, MFD, and EICAS displays, the audio selection, ELT reset, and the landing gear and pedal electric adjustment controls. It also accommodates the standby instruments and displays reversionary functions.

A glareshield panel is located over the main panel, including the master caution and master warning lights, flight control, display control, and lighting intensity controls. One of the different possible configurations of glareshield panel includes dual radar control panels.

An overhead panel provides the hydraulic, electrical, powerplant, APU, fire protection, environmental, and external and internal lighting controls.

The circuit breakers, in ordered and grouped positions, are placed on a panel aft of the overhead panel.

2.4.1.2 Left and Right Consoles

The left and right consoles accommodate the nose wheel steering handle, ashtrays, holders for cups, headset, and microphone, oxygen masks and oxygen control, a waste container, rechargeable flashlight, and recesses for crew publications.

2.4.1.3 Control Pedestal

The control pedestal, located between the two pilots, presents the engine control levers, the engine thrust rating panel, the speed brake lever, the emergency/parking brake lever, flight control switches (including flap selection), the pressurization control, the EICAS reversionary panel, radio management units, single radar control panel, HF control (optional), aileron/elevator disconnect handles, AP control, SPS, T/O configuration switch, and an FMS control display unit.

2.4.1.4 Pilot Seat

The pilot seat is provided with longitudinal, vertical (electrically actuated), seat back, and lumbar adjustments. The seat is attached to tracks which permit the horizontal adjustments.

An extended longitudinal travel permits pilot rest during long cruise flights (pilot foot rests are provided at the bottom of the main instrument panel).

2.4.2 Passenger Cabin

A 0.43 m (17 in) wide aisle, with a recessed floor leaving a 1.82 m (6 ft) height, allows for stand-up walking and the use of standard catering trolleys. The passenger cabin is 2.10 m (6 ft 11 in) wide and the standard configuration accommodates 44 passengers in 14 double seats on the right side, and 16 single seats on the left side, with a 31 in pitch. Different cabin layouts with increased capacity for galley and wardrobe are available as optional models.

2.4.2.1 Passenger Seat

The ergonomic reclining seats have been designed for a 0.79 m (31 in) pitch, with comfortable leg room. Double seats incorporate fold-up center arm rests. All seats are offered with snack tables, magazine pouches, underseat life-vest stowage, seat belts, and an adequate underseat room for carry-on articles with 1.9 m^3 (68.2 ft^3) net volume designed for 280 kg (558 lb) loading.

2.4.2.2 Passenger Service Unit

The passenger service unit contains gasper-type air outlets, reading lights, loudspeakers, attendant calling buttons, warnings, and oxygen dispensing unit for each seat.

2.4.2.3 Overhead Bin

The overhead bin is divided into eight sections and is installed on the right side of the cabin. The bins have a total volume of 1.40 m^3 (49.3 ft^3) and are designed for a 268 kg (591 lb) loading.

All sandwiches have Nomex honeycomb core faced by fiberglass fabric.

2.4.2.4 Wardrobe

The standard right wardrobe with a 0.93 m^3 (32.9 ft^3) total volume and 70 kg (154 lb) capacity is offered for carry-on articles on the forward right side of the passenger cabin between the RH side galley and cockpit partition.

The wardrobe modules are flat sandwich panel constructions with fiberglass facing the Nomex honeycomb core.

Optional RH wardrobe to replace the aft galley is offered as per Figure 2.4.2.

More places where to locate the wardrobes are contemplated and in the rear area there are a stowage compartment with a 0.18 m^3 (6.35 ft^3) and one wardrobe with a 0.36 m^3 (12.70 ft^3) total volume. They are shown in figure 2.4.2.

2.4.2.5 Flight Attendant Station

The standard flight attendant station is positioned at the cockpit partition, close to the main door. The seat is of the fold-away type to avoid interference with the door passageway. A seat for a second flight attendant is available, as an option, at the aft end of the aisle, standing in front of the lavatory door. When not in use, proper mechanisms allow its sliding against the lavatory wall, behind the last double-seat row.

The attendant seats are made up of machined parts combined with flat sandwich panels of graphite and Nomex honeycomb core.

2.4.2.6 Lavatory

The lavatory is installed at the aft cabin and contains a washbasin, waste container, ashtray, mirror, paper dispenser, automatic fire extinguisher, smoke detection system, and a recirculating toilet unit. A toilet shroud and a ventilation system, at the cabinet and waste tank, assure an odorless environment.

2.4.2.7 Galley

Two galley modules are installed on the right side of the forward passenger cabin.

The galleys are flat sandwich panel constructions with fiberglass fabric facing the Nomex honeycomb core.

2.4.3 Baggage Compartment

The baggage compartment complies with the FAR-25 ″class C″ requirements, presenting an available volume of 9.21 m^3 (325 ft^3) and maximum loading of 1,200 kg (2,646 lb).

The floor is designed for 391 kgf/m^2 (80 lb/ft^2) uniform distributed loading, and is provided with anchor plates for high-density load tiedown.

The compartment is provided with an approved smoke detector system, a ventilation system, and a baggage restraint net.

2.4.4 Observer Seat

The flight observer seat is installed right behind the copilot seat. When in use, it lies in front of the cockpit door, and when stowed, it folds up and rotates away from the door area, stowing against the right side of the cockpit partition. The cockpit door can be opened/closed either with the observer seat in use or stowed.

The observer seat is made up from machined parts combined with flat sandwich panels of graphite and Nomex honeycomb core.

CARGO/BAGGAGE VOLUME - m^3 (ft^3)	
WARDROBE/ CARRY ON BAGGAGE	0.93 (32.9)
FWD GALLEY	0.70 (24.7)
AFT GALLEY	0.48 (16.94)
BAGGAGE COMPARTMENT	9.21 (325.0)
AFT WARDROBE	0.36 (12.70)
AFT STOWAGE COMPARTMENT	0.18 (6.35)
OVERHEAD BIN	1.44 (49.3)
UNDERSEAT VOLUME	1.63 (57.4)

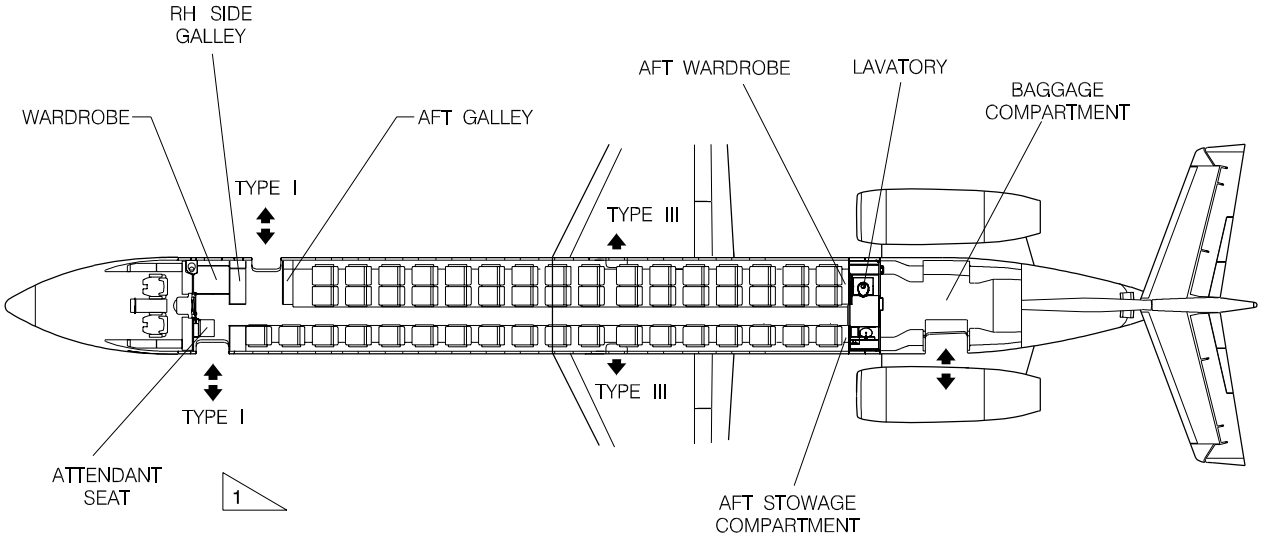

1 TYPE I AND TYPE III ACCORDING TO FAR 25-PAR.25-807

APM020256.MCE

Figure 2.4.1 - Interior Arrangements - Standard Configuration

OPTION 1

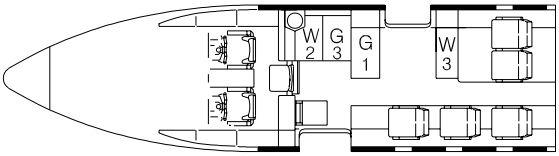

OPTION 2

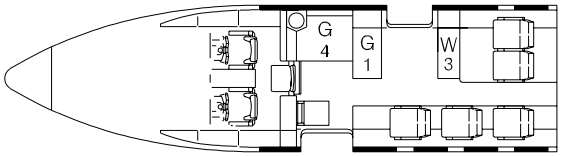

OPTION 3

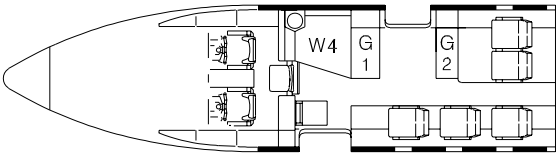

REAR AREA

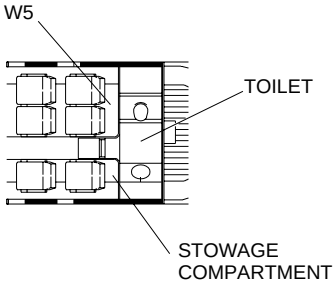

ITEM	OPTION 1	OPTION 2	OPTION 3
PASSENGERS	44	44	44
HALF TROLLEY	3	4	2
GALLEY VOLUME (G) m^3 (ft^3)	1.17 (41.0)	1.63 (57.8)	1.23 (43.1)
CATERING kg (lb)	120 (485.4)	280 (617.8)	160 (353)
STOWAGE COMPARTMENT VOLUME (S) m^3 (ft^3)	0.18 (6.35)	-	-
WARDROBE VOLUME (W) m^3 (ft^3)	1.35 (60.3)	0.89 (31.1)	1.58 (55.6)

NOTE:
OPTION 1 - G = G1 + G3 W = W2 + W3 + W5
OPTION 2 - G = G1 + G4 W = W3 + W5
OPTION 3 - G = G1 + G2 W = W4 + W5

145APM020257.MCE A

Figure 2.4.2 - Interior Arrangements - Optional Configuration

2.5 Passenger Cabin Cross-Section

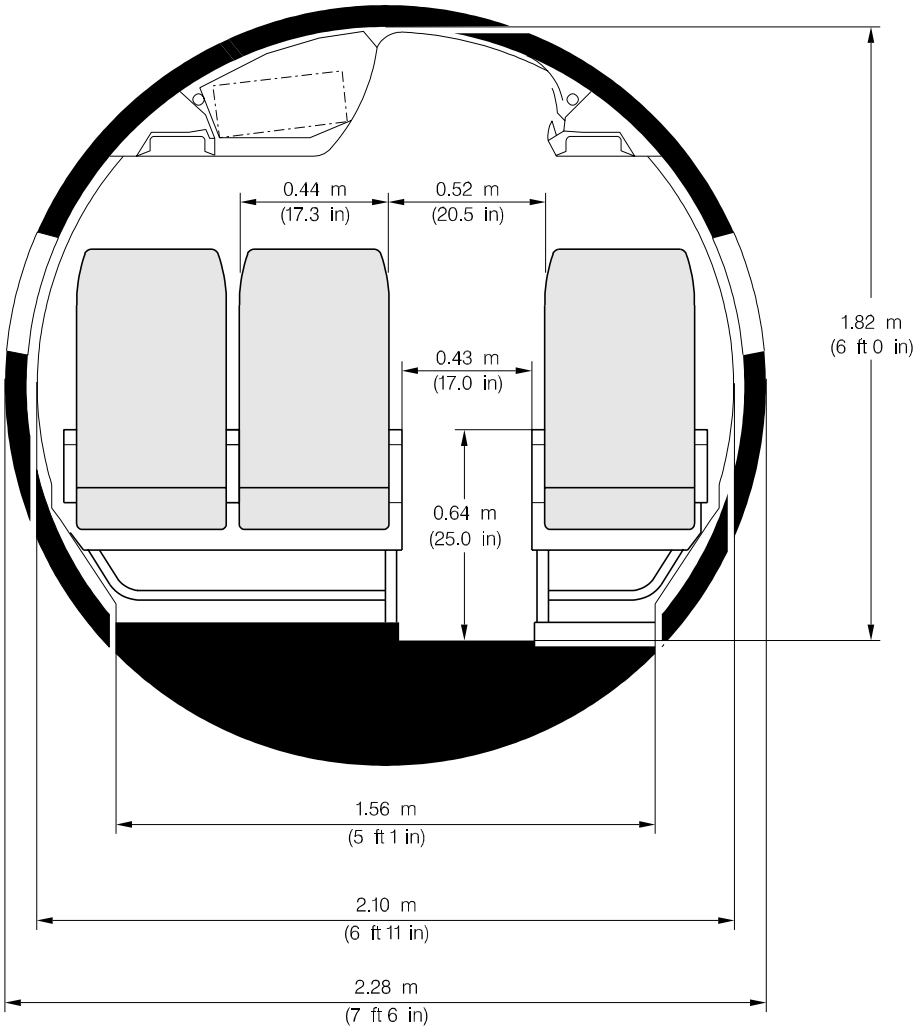

APM020012.MCE B

Figure 2.5.1 - Passenger Cabin Cross-Section

2.6 Lower Compartment Containers

The EMB-140 aircraft does not have lower compartment containers.

2.7 Door Clearances

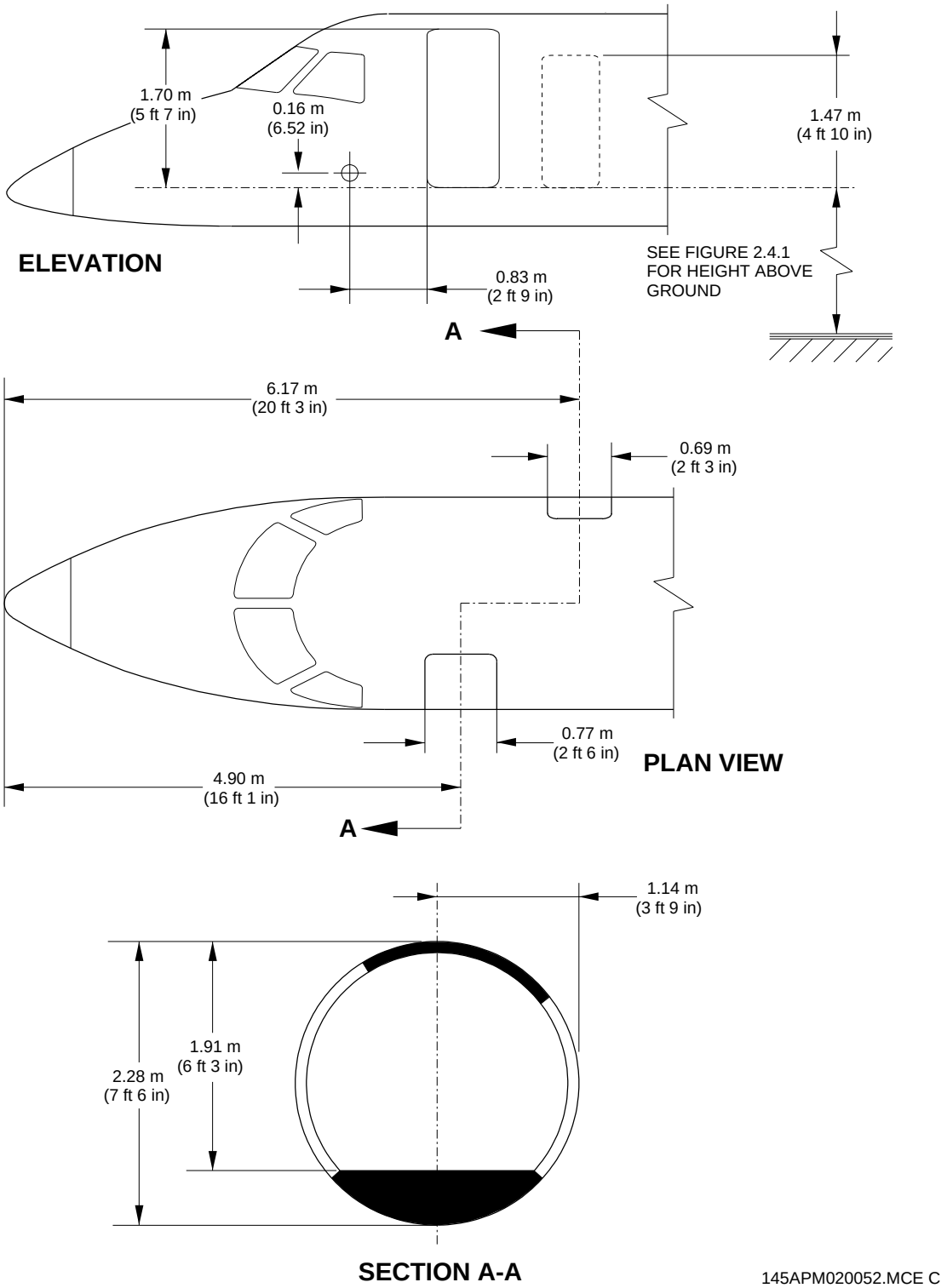

Figure 2.7.1 - Door Clearances
Sheet 1

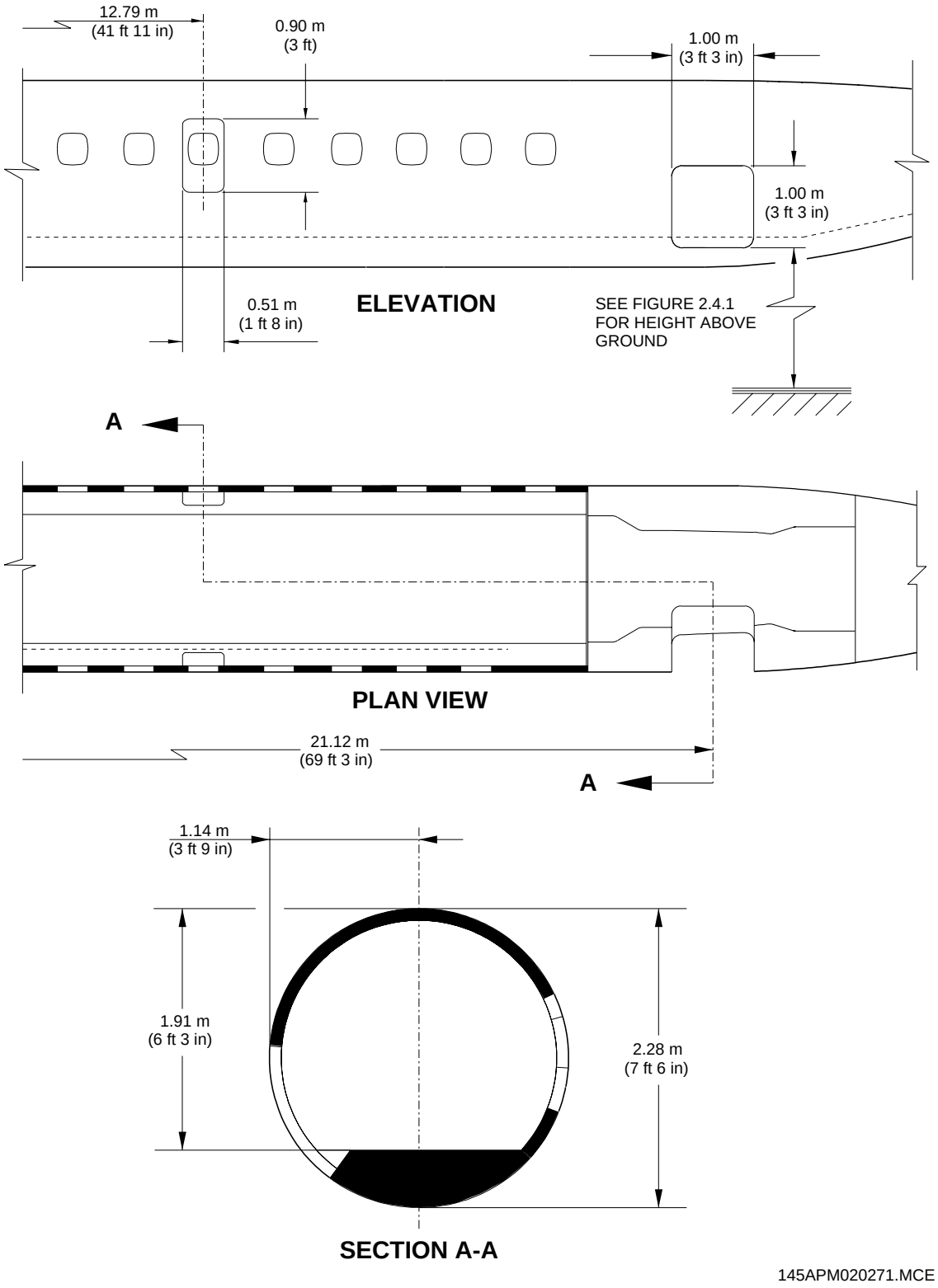

Figure 2.7.1 - Door Clearances
Sheet 2

THIS PAGE LEFT BLANK INTENTIONALLY

3. AIRPLANE PERFORMANCE

3.1 General Information

The performance of the airplane and engine depends on the generation of forces by the interaction between the airplane or engine and the air mass through which it flies. The atmosphere has a pronounced effect on the temperature, pressure and density of the air.

The ICAO - International Civil Aviation Organization establishes standard basics for estimating and comparing airplane and engine performance. Some ICAO - International Civil Aviation Organization standard basics are shown below:

1. Sea level standard day: Standard Temperature To = 15°C (288.15 K) Standard Pressure Po = 101.3 kPa (29.92 in.Hg) Standard Density ρo = 0.002377 slug per cubic feet.

2. ISA - International Standard Atmosphere.

Table 3.1.1 - ISA - International Standard Atmosphere

ELEVATION		STANDARD DAY TEMP	
m	ft	^{o}C	^{o}F
0	0	15	59
305	1000	13	55.4
610	2000	11.6	51.9
915	3000	9.1	48.3
1220	4000	7.1	44.7
1524	5000	5.1	41.2
1830	6000	3.1	37.6
2440	8000	-0.8	30.5

Section 3.2 presents payload x range information for a specific long range, cruise altitude, and the fuel reserve condition shown.

Section 3.3 and 3.4 represent FAR takeoff and landing runway length requirements for FAA certification.

The performance data shown in this section must be used for general airport planning. For information about performance, refer to AOM and AFM - Aircraft Flight Manual.

EMBRAER should be contacted for other charts containing payload x range, takeoff and landing runway length requirements with conditions different from those presented in this section.

3.2 Payload x Range

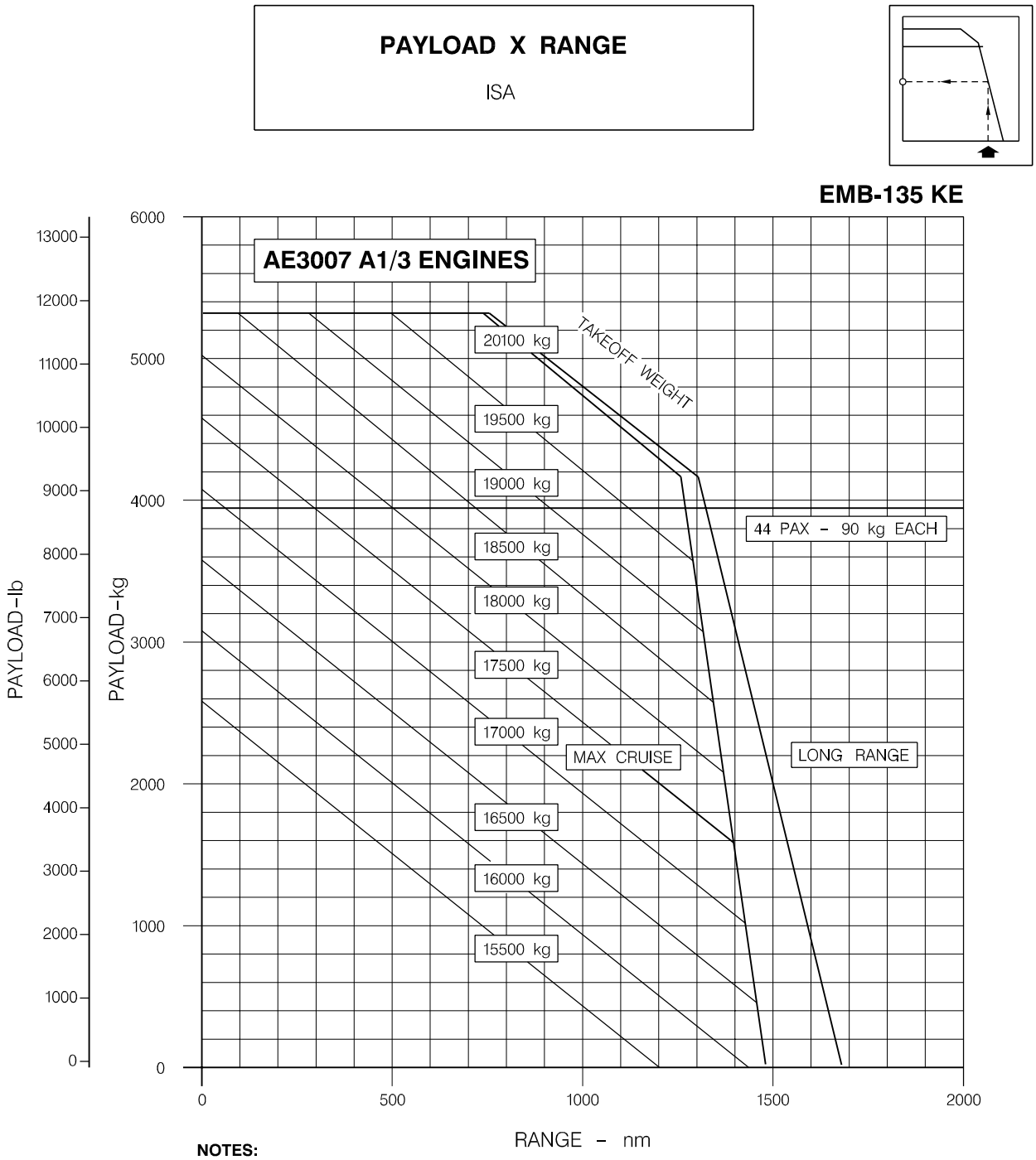

NOTES:

FLIGHT LEVEL.....370
RESERVE.....100 nm ALTERNATE + 45 min HOLDING
MAX TAKEOFF WEIGHT.....20100 kg (43315 lb)
MAX ZERO FUEL WEIGHT.....17100 kg (37699 lb)
BASIC OPERATING WEIGHT.....11770 kg (25948 lb)
MAX USABLE FUEL.....4173 kg (9200 lb)

APM030358.MCE A

Figure 3.2.1 - Payload x Range, Engine with Thrust Reverser Sheet 1

PAYLOAD X RANGE

ISA

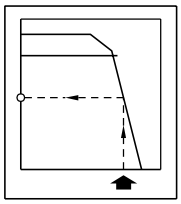

EMB-135 KL

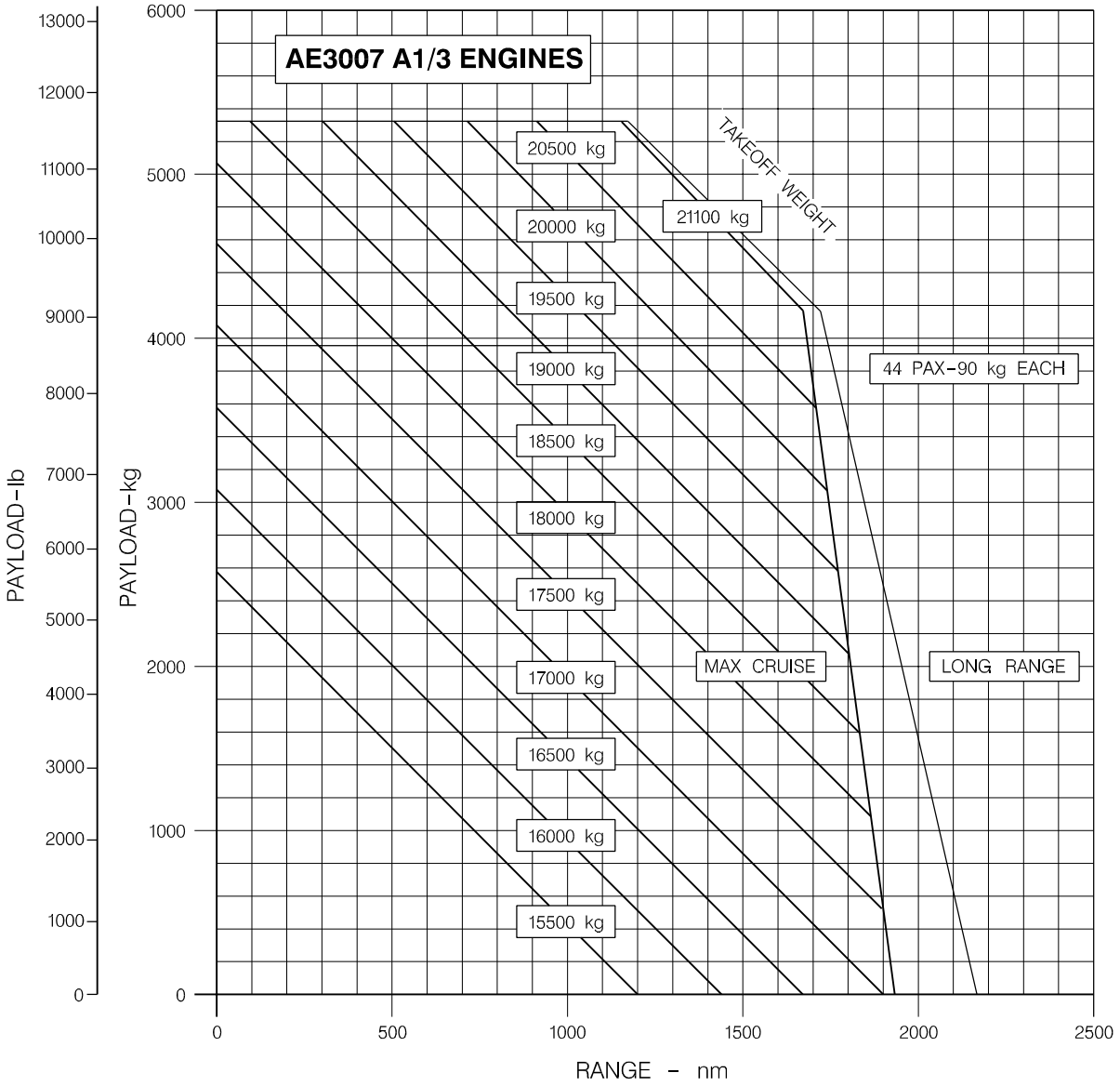

NOTES: FLIGHT LEVEL.....370
RESERVE.....100 nm ALTERNATE + 45 min HOLDING
MAX TAKEOFF WEIGHT.....21100 kg (46518 lb)
MAX ZERO FUEL WEIGHT.....17100 kg (37699 lb)
BASIC OPERATING WEIGHT.....11762 kg (25930 lb)
MAX USABLE FUEL.....5187 kg (11435 lb)

145APM030359.MCE B

Figure 3.2.1 - Payload x Range, Engine with Thrust Reverser
Sheet 2

3.3 FAR Takeoff Runway Length Requirements

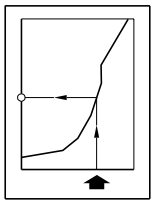

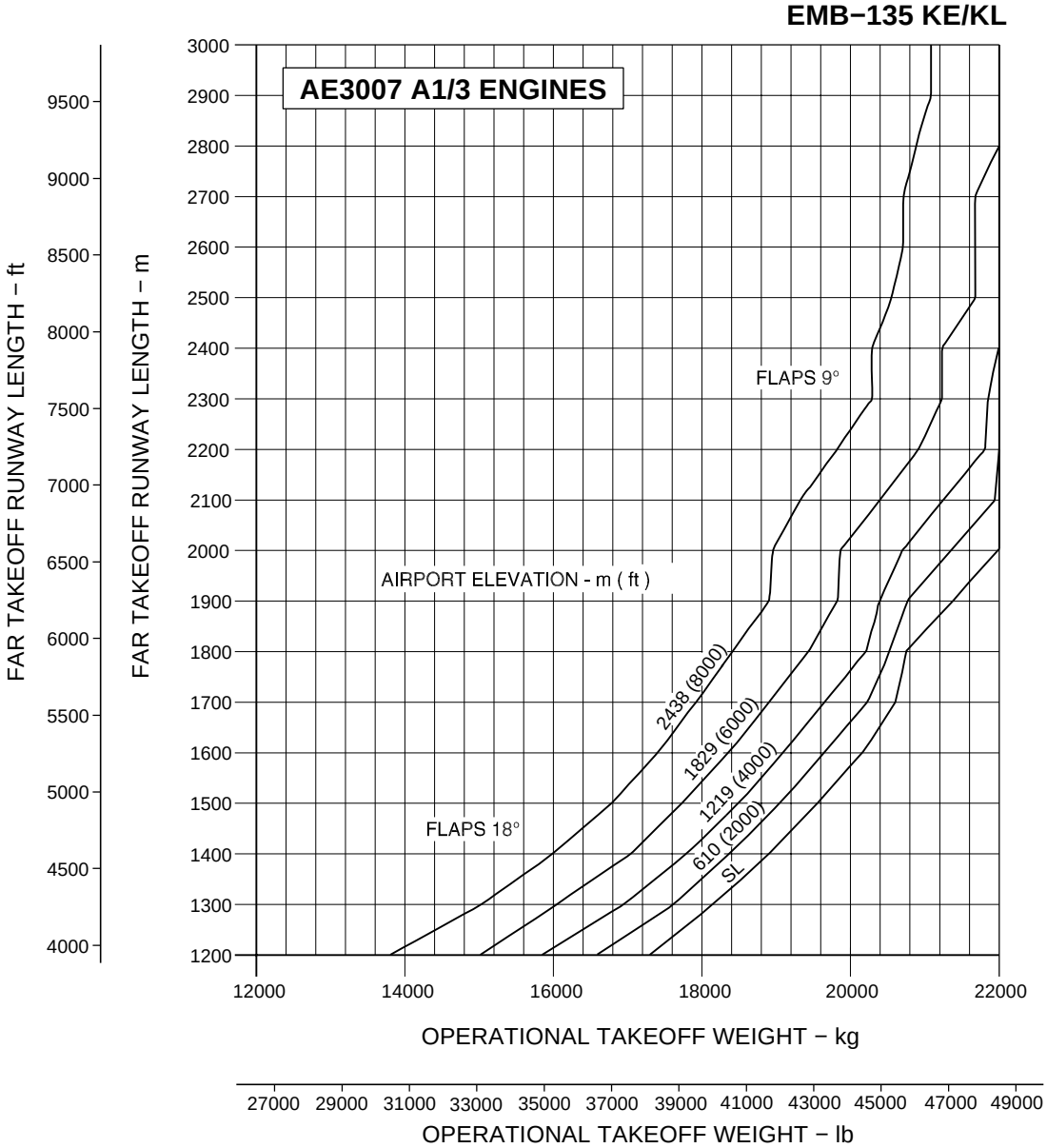

Figure 3.3.1 - FAR Takeoff Runway Length Requirements - ISA Conditions

TAKEOFF RUNWAY LENGTH

DRY AND LEVELED RUNWAY

FLAPS 9/18 T/O1 MODE NORMAL V2

ZERO WIND, ISA+15°C

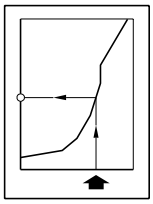

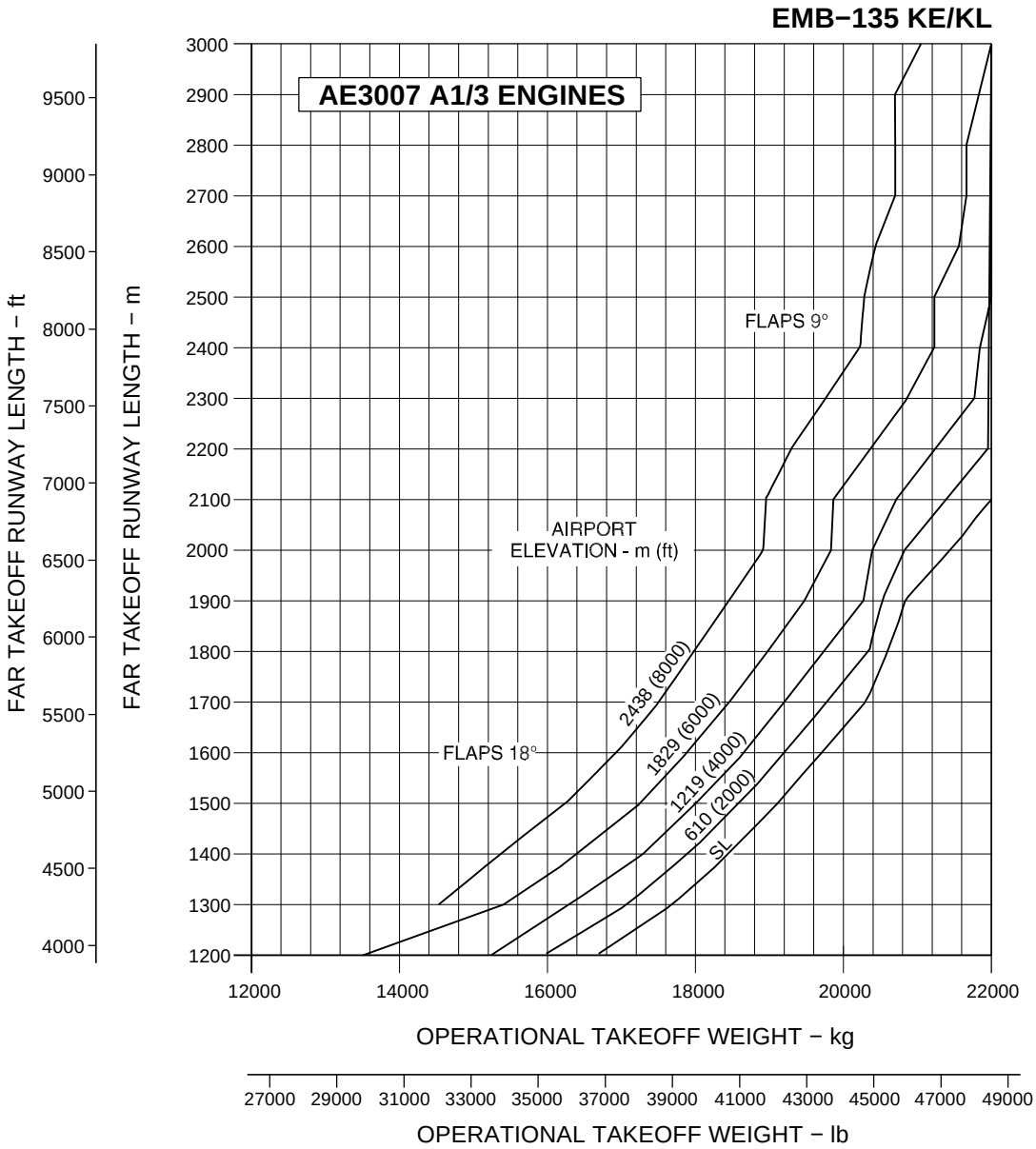

145APM030361C.MCE

Figure 3.3.2 - FAR Takeoff Runway Length Requirements - ISA + 15°C Conditions

3.4 FAR Landing Runway Length Requirements

MAXIMUM LANDING WEIGHT

DRY AND LEVELED RUNWAY
ZERO WIND
FLAPS 45°

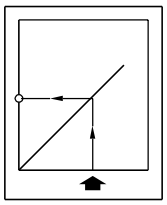

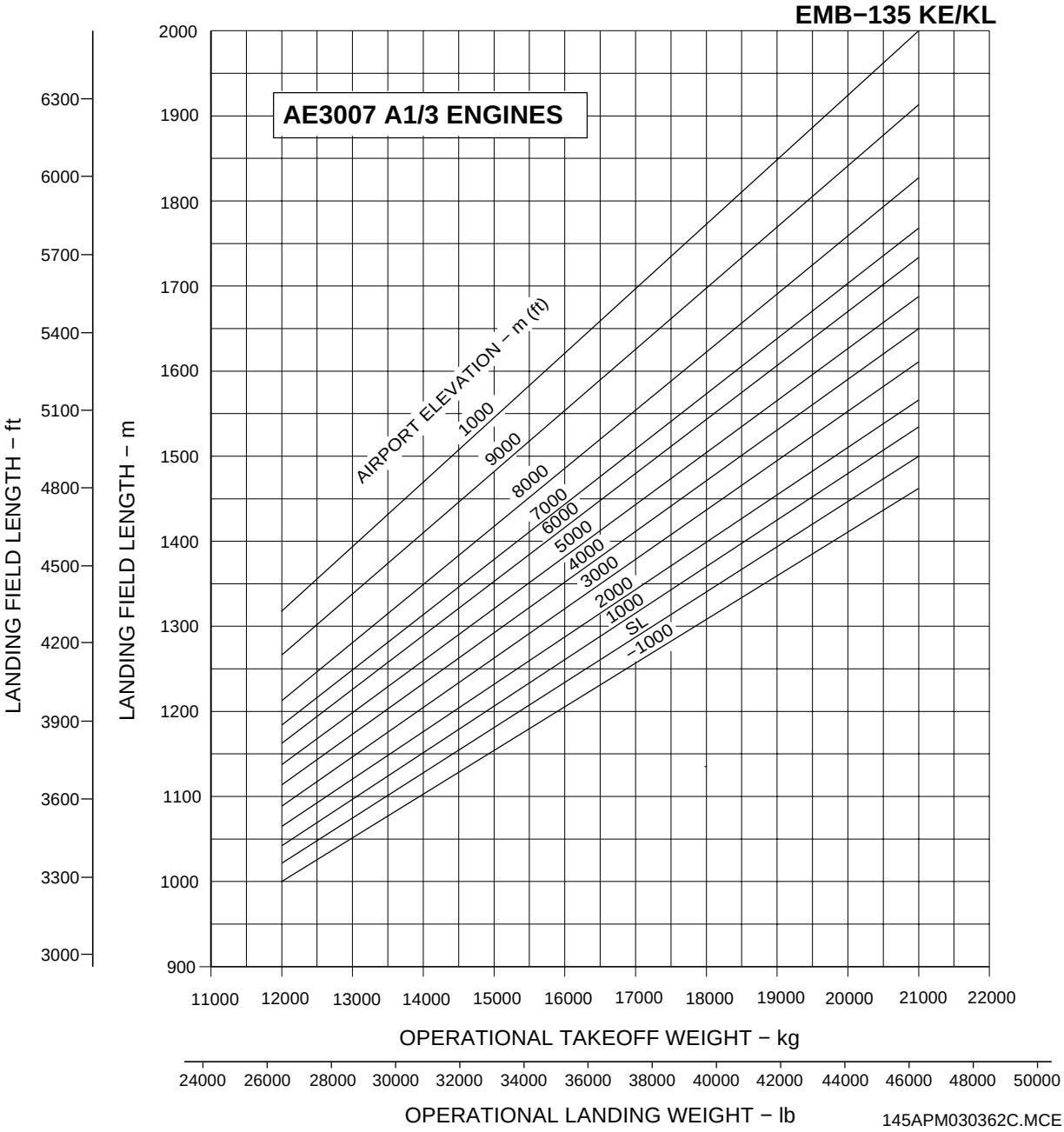

Figure 3.4.1 - FAR Landing Runway Length Requirements - Flaps 45°

4. GROUND MANEUVERING

4.1 General Information

This section provides the airplane turning capability and maneuvering characteristics. For ease of presentation, these data have been determined from theoretical limits imposed by the geometry of the airplane.

As such, they reflect the turning capability of the aircraft in favorable operating circumstances. These data should be used only as guidelines for the method of determination of such parameters and for the maneuvering characteristics of the airplane.

In the ground operating mode, varying airline practices may demand that more conservative turning procedures be adopted to avoid excessive tire wear and reduce possible maintenance problems. Airline operating techniques will vary, as far as the performance is concerned, over a wide range of operating circumstances throughout the world.

Variations from standard aircraft operating patterns may be necessary to satisfy physical constants within the maneuvering area, such as adverse grades, limited area, or high risk of jet blast damage. For these reasons, the ground maneuvering requirements should be coordinated with the using airline prior to the layout planning.

Section 4.2 presents the turning radii for various nose gear steering angles.

Section 4.3 presents data on the minimum width of the pavement for 180° turn.

Section 4.4 presents the pilot's visibility from the cockpit and the limits of ambinocular vision through the windows. Ambinocular vision is defined as the total field of vision seen by both eyes at the same time.

Section 4.5 presents the performance of the airplane on runway-to-taxiway, and taxiway-to-taxiway turn paths.

Section 4.6 presents the runway holding bay configuration.

4.2 Turning Radii - No Slip Angle

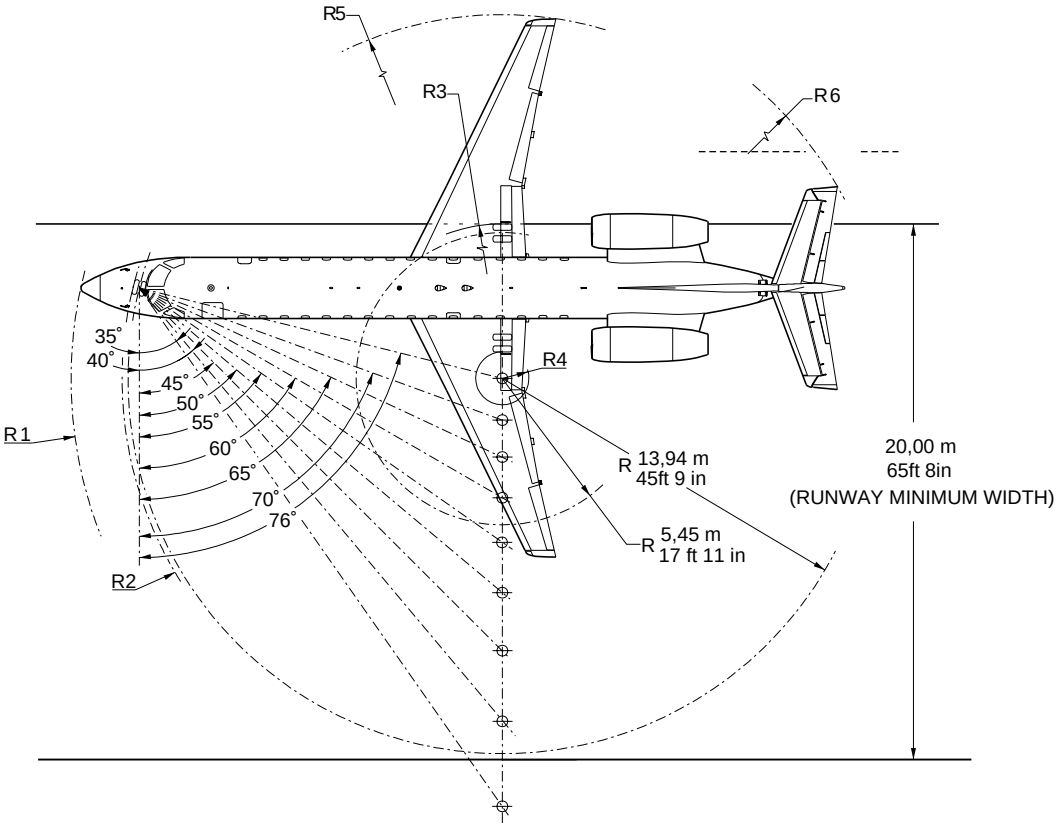

STEERING STEEL	NOSE		NOSE GEAR		OUTBOARD GEAR		INBOARD GEAR		RIGHT WINGTIP		RIGHT TAILTIP	
	R1		R2		R3		R4		R5		R6	
35°	24,07 m	78ft 10in	23,60 m	77ft 6in	21,70 m	71ft 2in	16,79 m	55ft 1in	29,35 m	96ft 3in	26,31 m	86ft 4in
40°	22,50 m	73ft 0in	21,14 m	69ft 5in	18,55 m	60ft 10in	13,78 m	45ft 3in	26,20 m	85ft 10in	23,58 m	77ft 4in
45°	20,70 m	65ft 10in	19,20 m	63ft 0in	15,89 m	52ft 2in	11,15 m	36ft 7in	23,53 m	77ft 2in	21,39 m	70ft 3in
50°	19,36 m	63ft 5in	17,70 m	58ft 1in	13,01 m	42ft 8in	9,00 m	29ft 7in	21,42 m	70ft 3in	19,64 m	64ft 5in
55°	18,32 m	60ft 2in	16,65 m	54ft 8in	11,84 m	38ft 10in	7,10 m	23ft 0in	19.57 m	64ft 2in	18,23 m	59ft 10in
60°	17,51 m	57ft 5in	15,76 m	51ft 9in	10,16 m	33ft 4in	5,44 m	17ft 10in	17,92 m	58ft 9in	17,05 m	56ft 0in
65°	16,92 m	55ft 6in	15,11 m	49ft 7in	8,69 m	28ft 6in	3,92 m	12ft 10in	16,14 m	53ft 0in	16,06 m	52ft 9in
70°	16,45 m	54ft 0in	14,59 m	47ft 11in	7,26 m	23ft 11in	2,56 m	8ft 5in	15,06 m	49ft 5in	15,22 m	49ft 11in
76°	16,05 m	52ft 8in	14,16 m	46ft 6in	5,74 m	18ft 10in	0,98 m	3ft 3in	13,53 m	44ft 5in	14,40 m	47ft 3in

145APM040451.MCE

Figure 4.2.1 - Turning Radii - No Slip Angle

4.3 Minimum Turning Radii

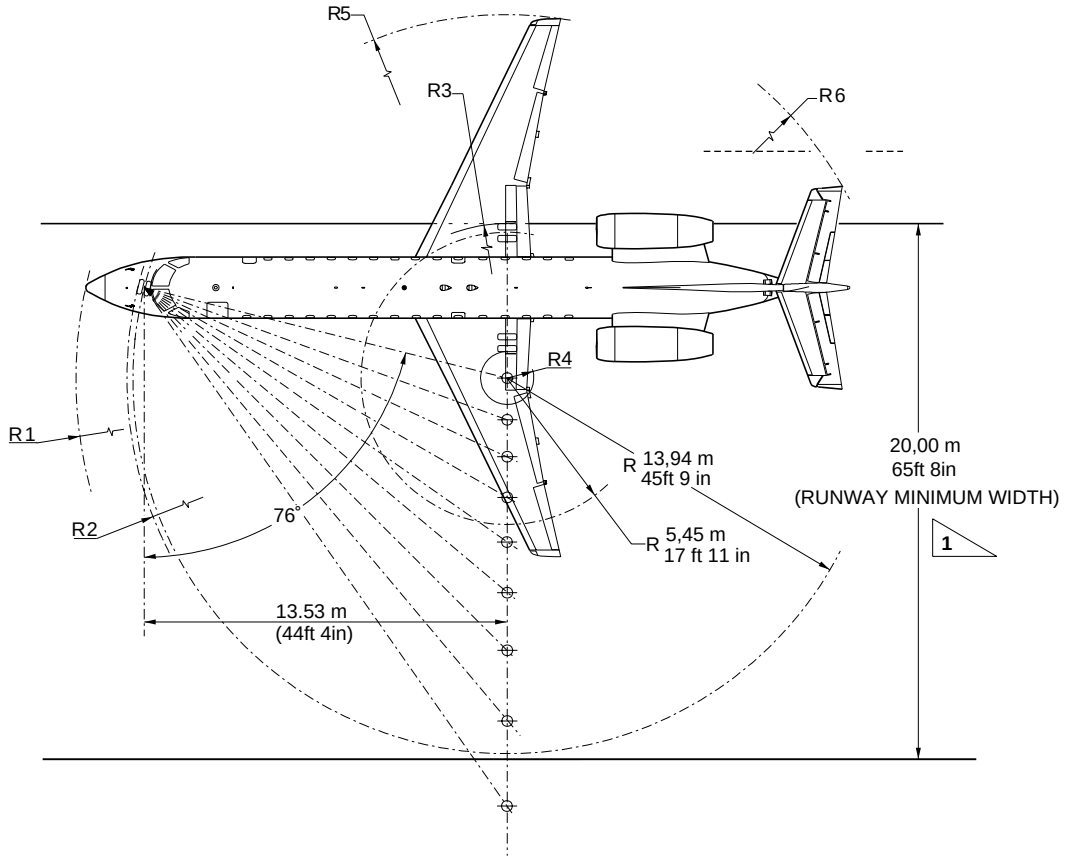

STEERING STEEL	NOSE		NOSE GEAR		OUTBOARD GEAR		INBOARD GEAR		RIGHT WINGTIP		RIGHT TAILTIP	
	R1		R2		R3		R4		R5		R6	
76°	16,05 m	52ft 8in	14,16 m	46ft 6in	5,74 m	18ft 10in	0,98 m	3ft 3in	13,53 m	44ft 5in	14,40 m	47ft 3in

NOTE: ACTUAL OPERATING DATA WILL BE GREATER THAN VALUES SHOWN SINCE TIRE SLIPPAGE IS NOT CONSIDERED IN THIS CALCULATION.

1 PAVEMENT WIDTH FOR 180° TURN

145APM040452.MCE

Figure 4.3.1 - Minimum Turning Radii

4.4 Visibility from Cockpit in Stationary Position

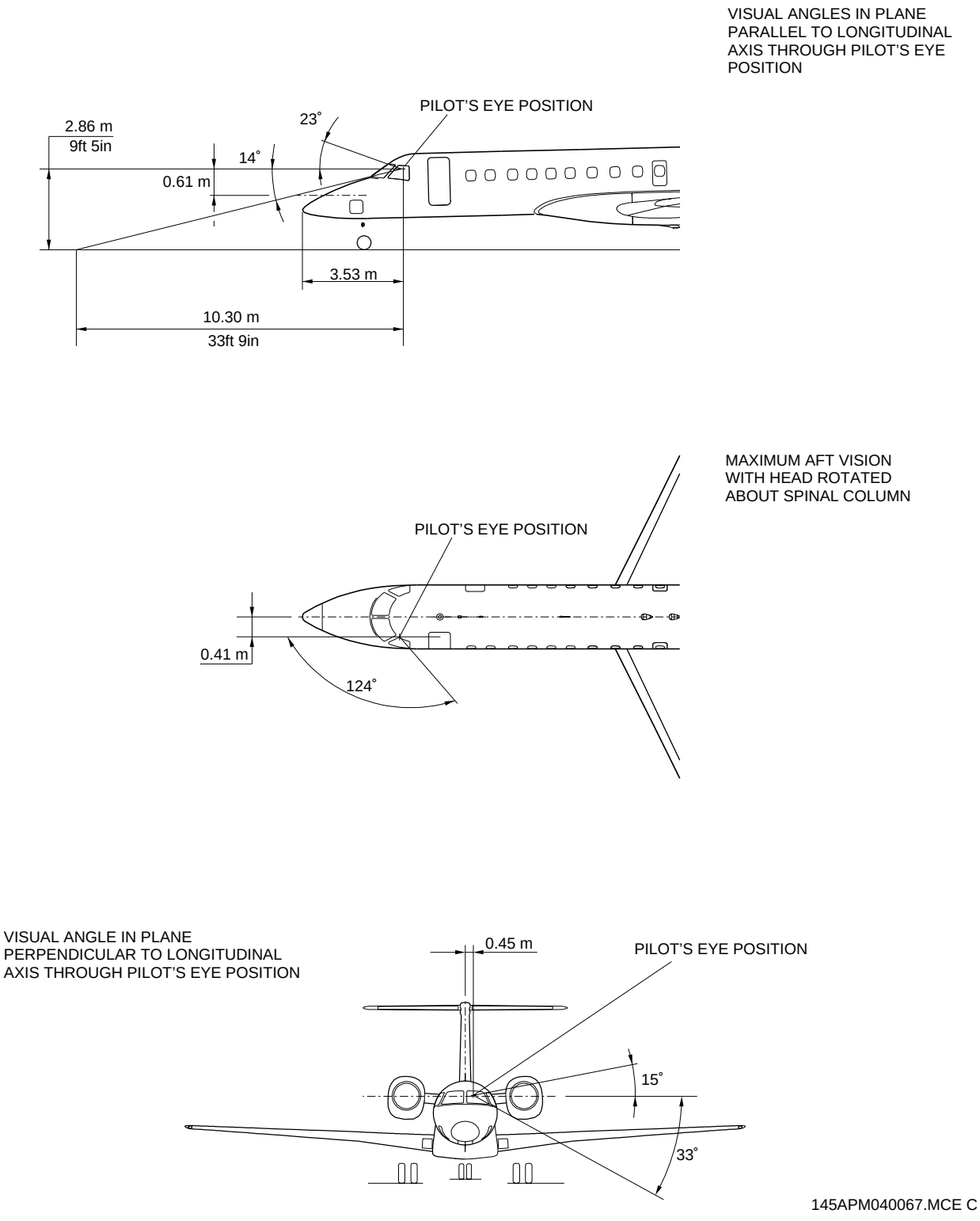

Figure 4.4.1 - Visibility from Cockpit in Stationary Position

4.5 Runway and Taxiway Turn Paths

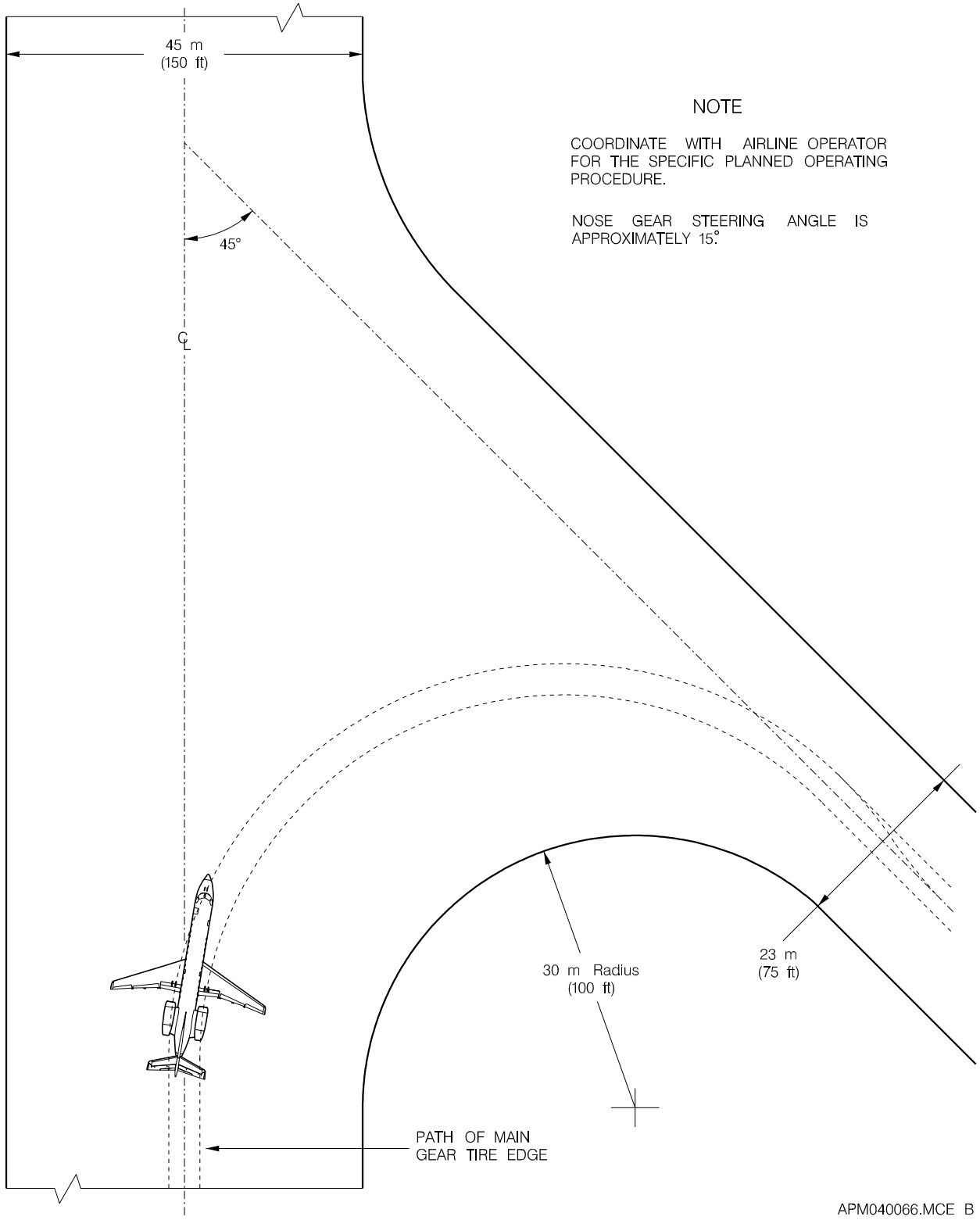

Figure 4.5.1 - More than 90º Turn - Runway to Taxiway

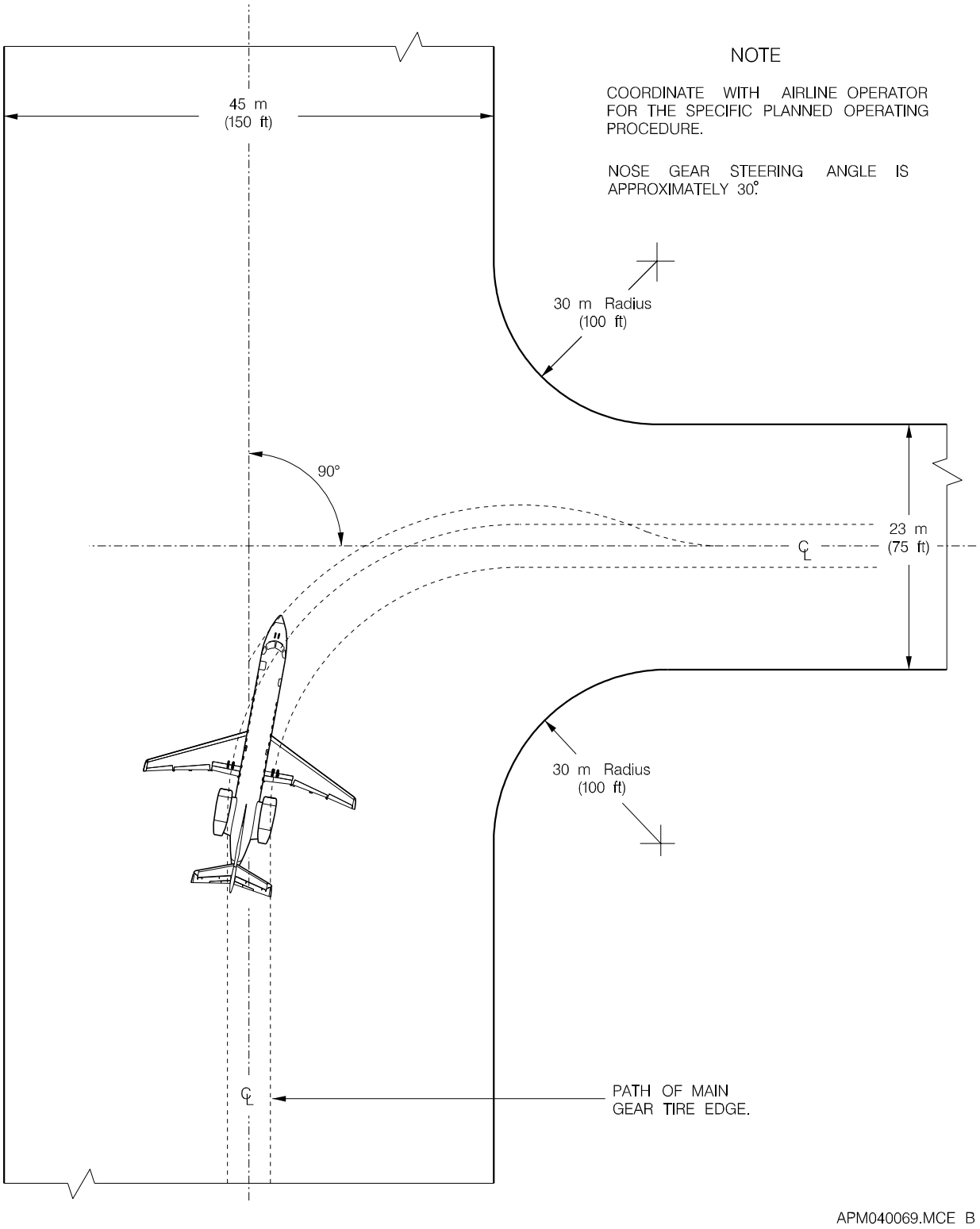

Figure 4.5.2 - 90° Turn - Runway to Taxiway

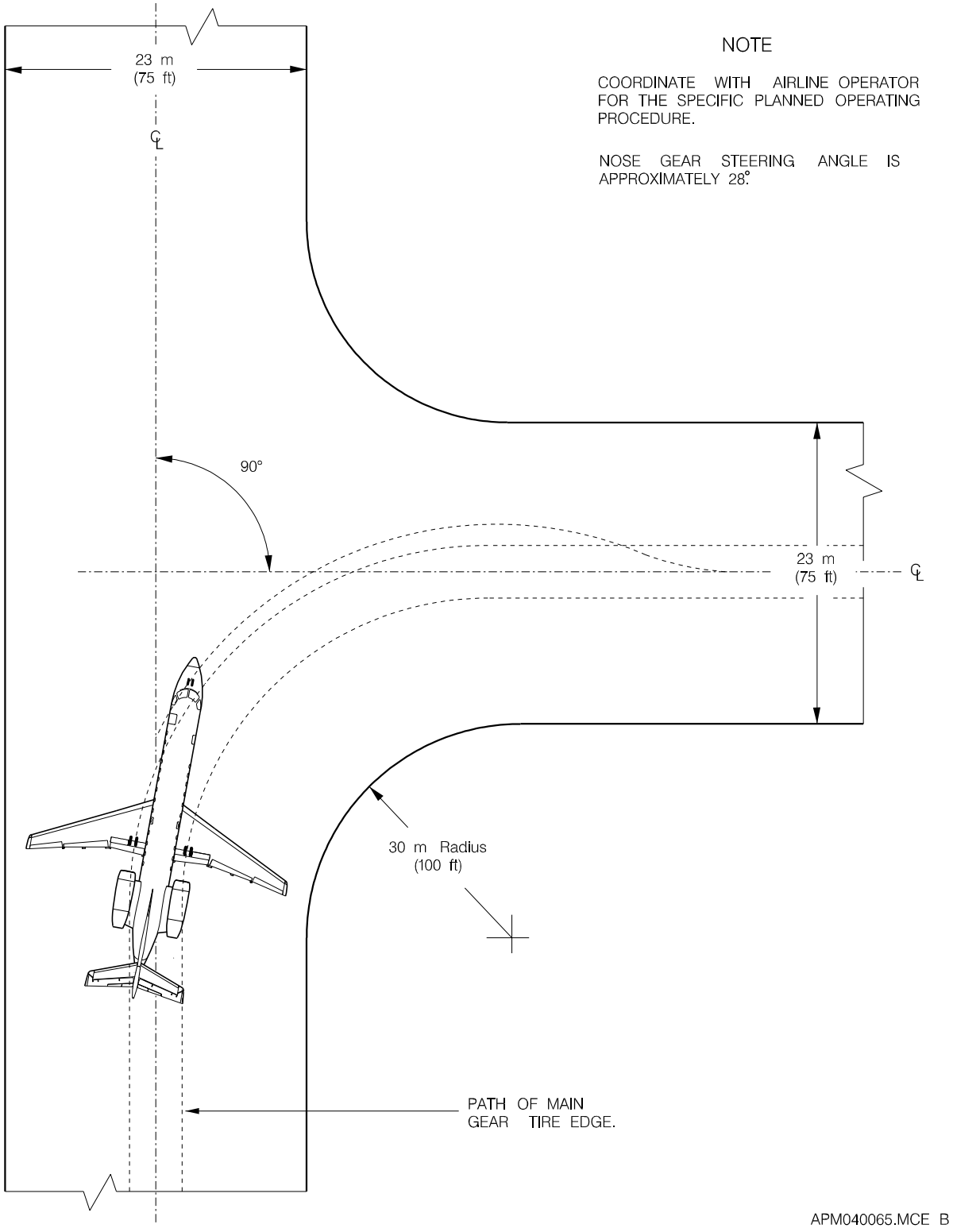

NOTE

COORDINATE WITH AIRLINE OPERATOR FOR THE SPECIFIC PLANNED OPERATING PROCEDURE.

NOSE GEAR STEERING ANGLE IS APPROXIMATELY 28°.

Figure 4.5.3 - 90º Turn - Taxiway to Taxiway

4.6 Runway Holding Bay

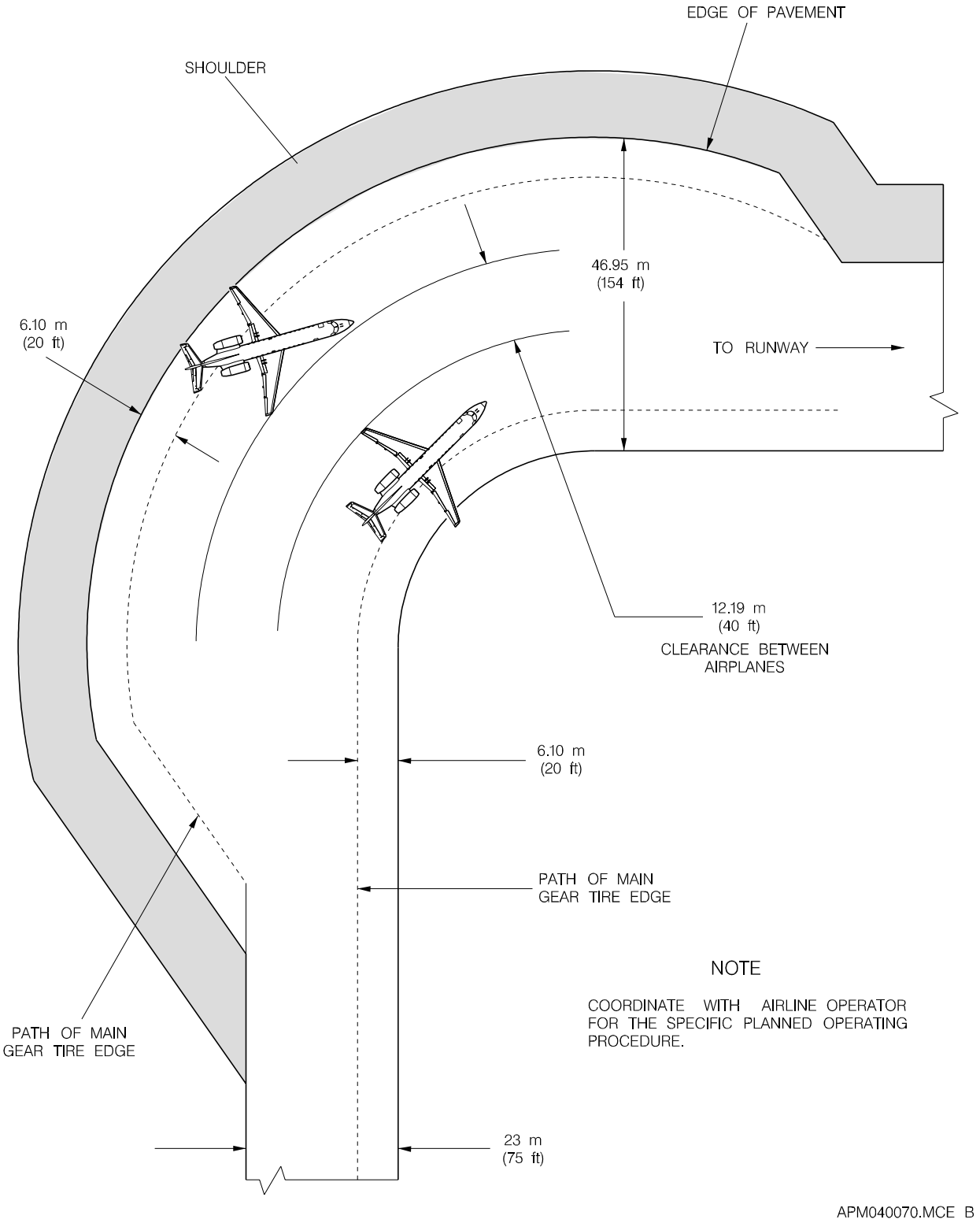

Figure 4.6.1 - Runway Holding Bay

5. TERMINAL SERVICING

5.1 General Information

During turnaround at the air terminal, certain services must be performed on aircraft, usually within a given time to meet flight schedules. This section shows servicing vehicle arrangements, schedules, locations of servicing points, and typical servicing requirements. The data presented herein reflect ideal conditions for a single airplane. Servicing requirements may vary according to the airplane condition and airline procedure.

This section provides the following information:

– Typical arrangements of ground support equipment during turnaround.

– Typical turnaround and enroute servicing times at an air terminal. These charts give typical schedules to perform servicing on the airplane within a given time. Servicing times could be rearranged to suit availability of personnel, airplane configuration, and degree of servicing required.

– The locations of ground servicing connections in graphic and tabular forms. Typical capacities and servicing requirements are shown in the figures. Services with requirements that vary with conditions are described in the subsequent figures.

– Air conditioning requirements for heating and cooling the airplane, using low-pressure conditioned air. This conditioned air is supplied through an 8-inch GAC directly to the air distribution system, bypassing the air-cycle machines. Normally, a 36000 BTU/h source would be sufficient to meet the air conditioning requirements.

– Ground towing requirements for various towing conditions. Drawbar pull and total traction wheel load may be determined by considering airplane weight, pavement slope, coefficient of friction, and engine idle thrust.

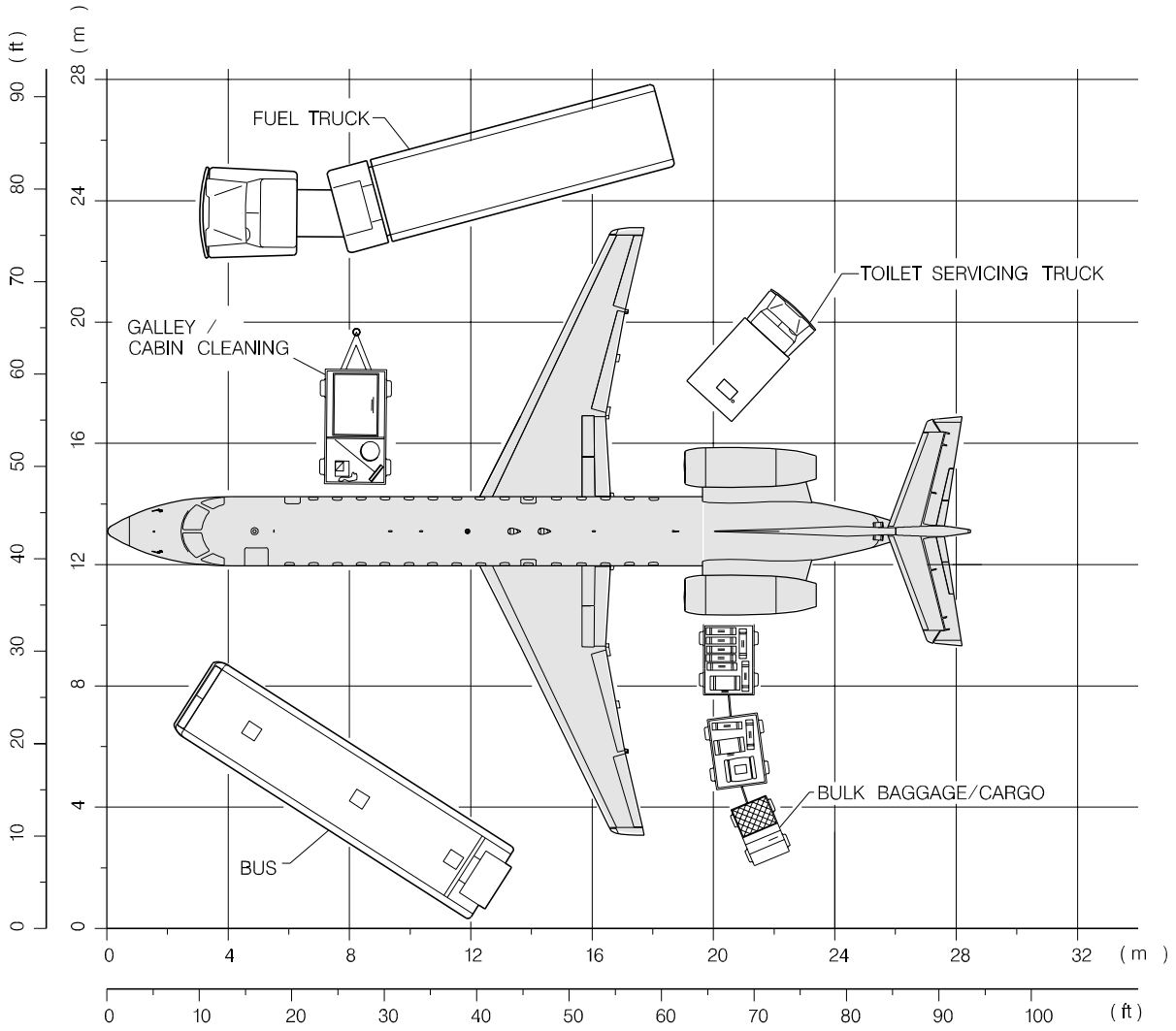

APM000127.MCE

Figure 5.1.1 - Airplane Servicing Arrangement
Sheet 1

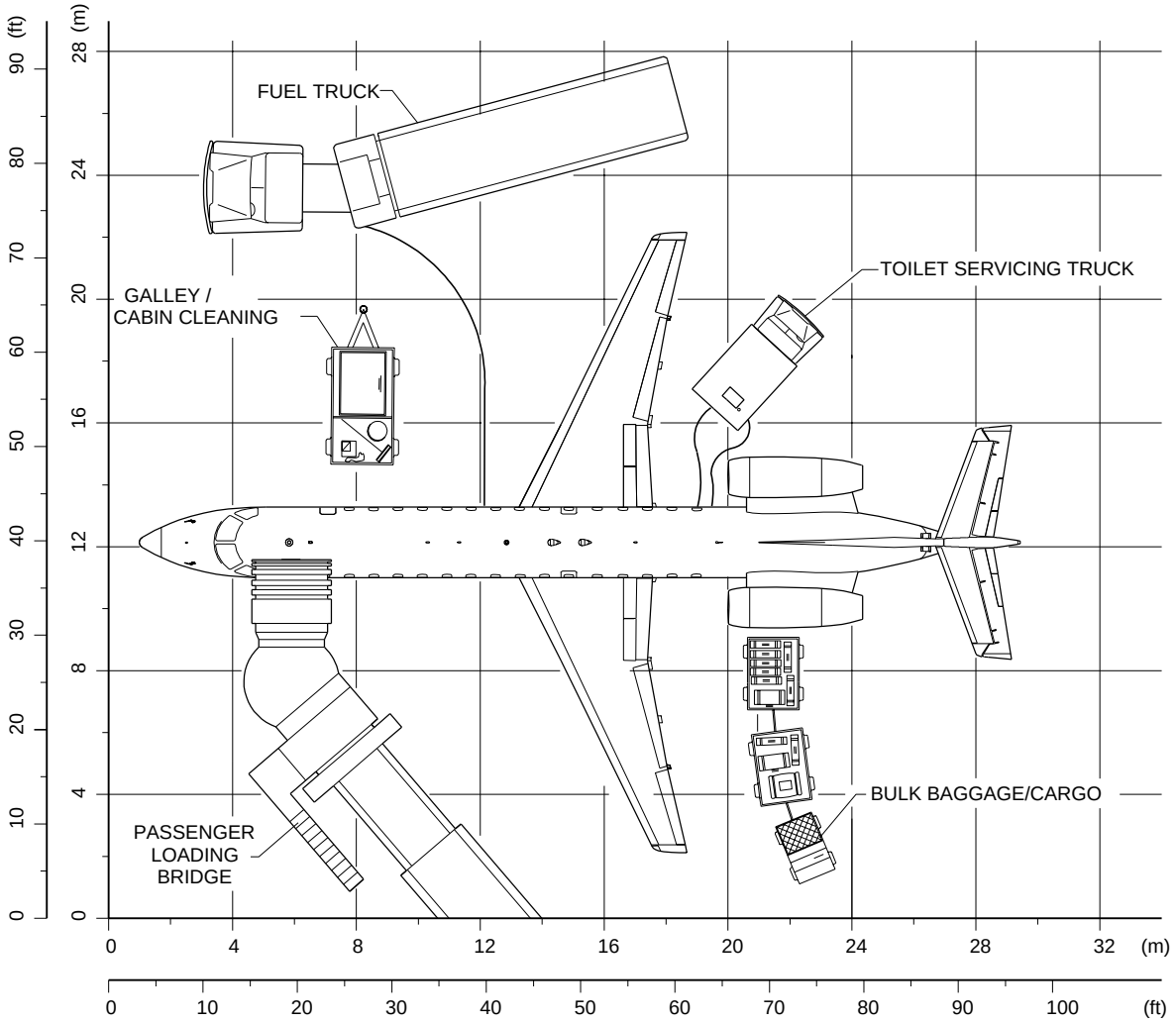

145APM000128.MCE

Figure 5.1.1 - Airplane Servicing Arrangement
Sheet 2

5.2 Air Terminal Operation - Turnaround Station

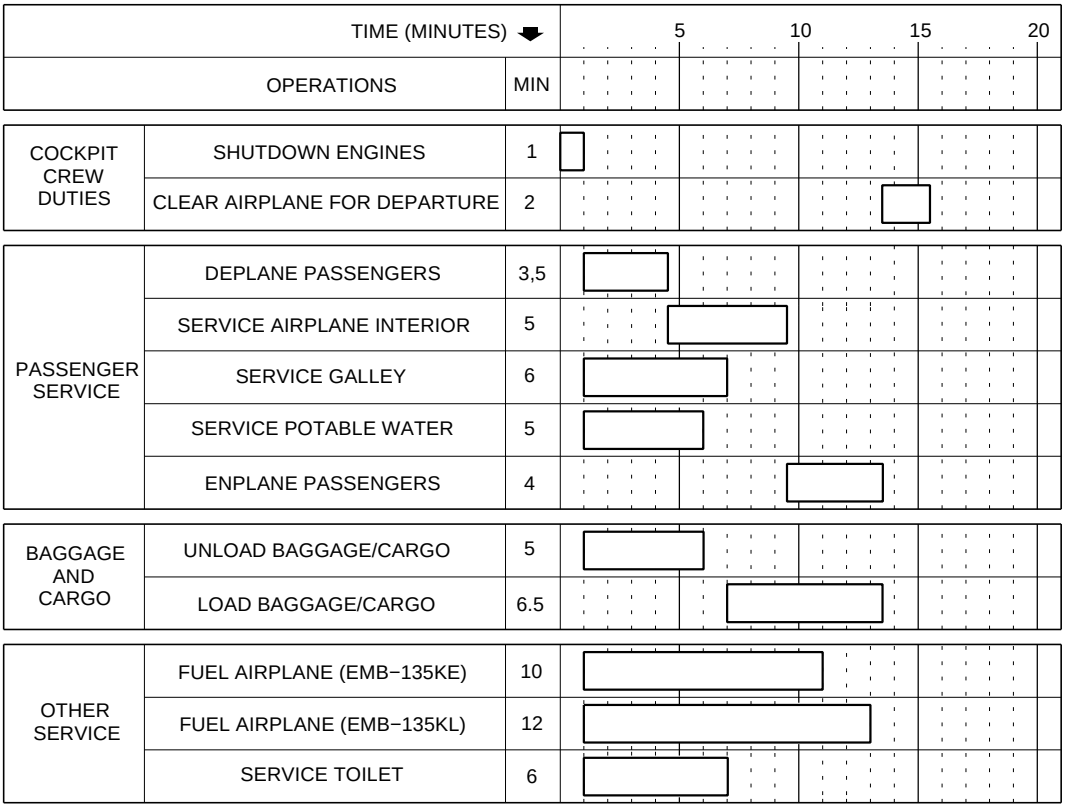

NOTE:

− TIME OF 15,5 MINUTES INCLUDES EQUIPMENT POSITIONING AND REMOVAL
− 85% FUEL TANK CAPACITY REFUELING PRESSURE 50 psi (344 kPa) at 125 gpm (473 lpm)

145APM050563.MCE A

Figure 5.2.1 - Air Terminal Operation - Turnaround Station

5.3 Air Terminal Operation - Enroute Station

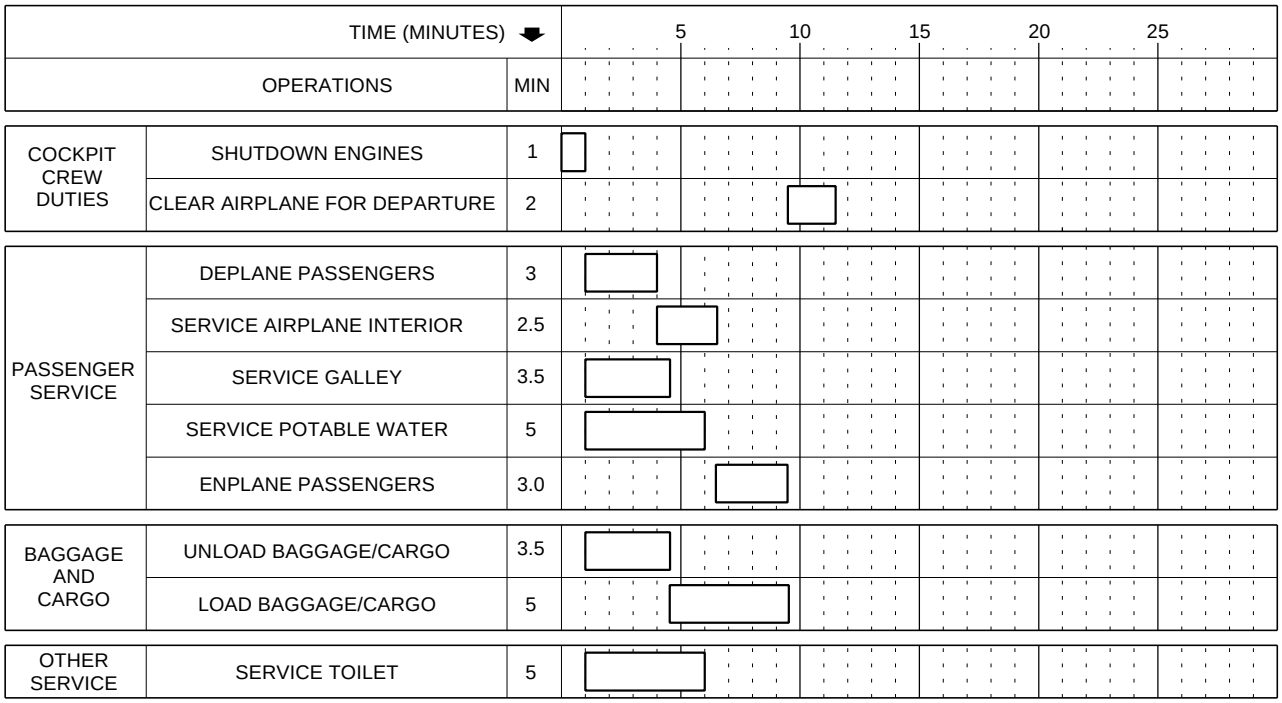

NOTE:

− TIME OF 11.5 MINUTES INCLUDES EQUIPMENT POSITIONING AND REMOVAL

145APM050091.MCE B

Figure 5.3.1 - Air Terminal Operation - Enroute Station

5.4 Ground Servicing Connections

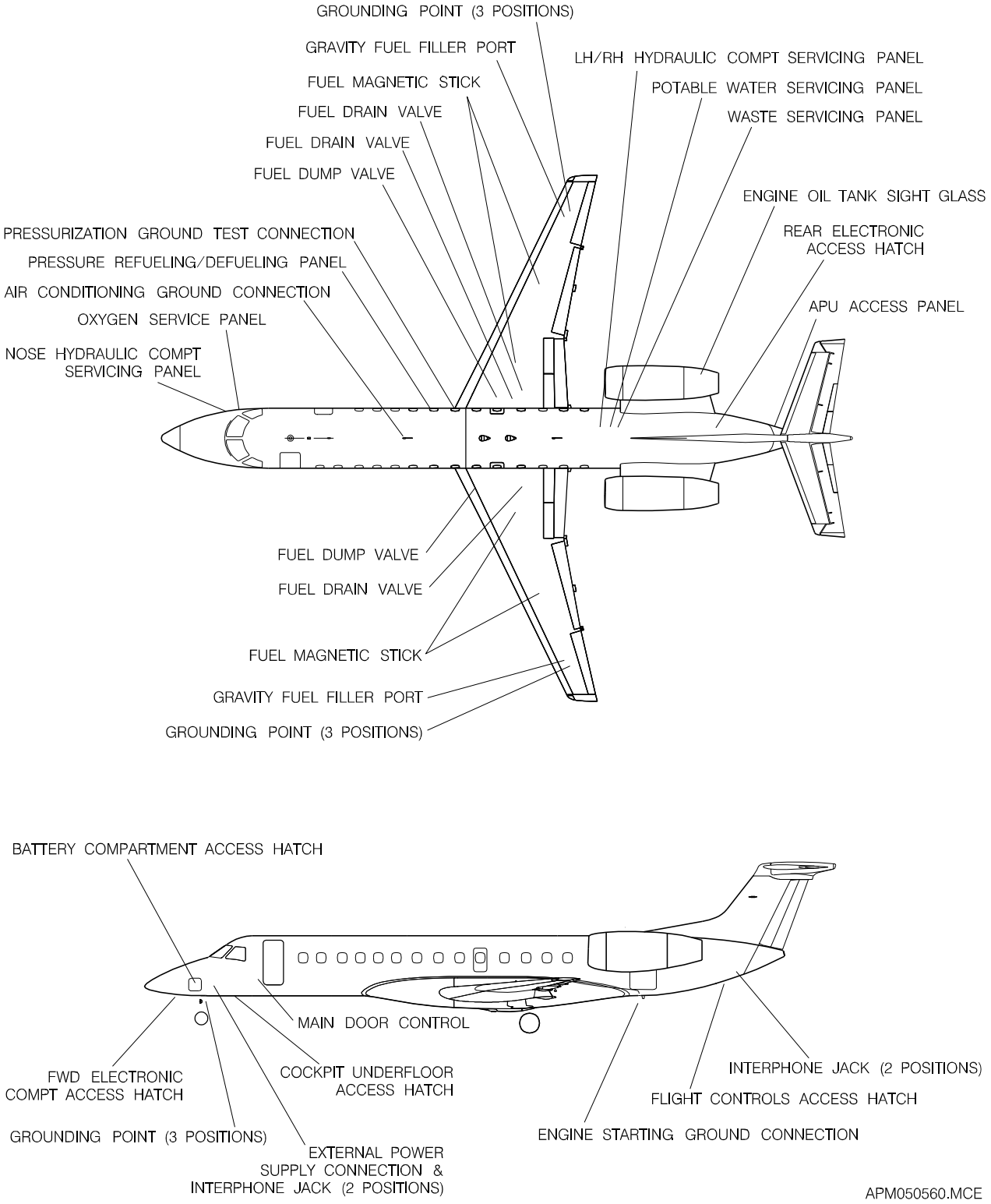

Figure 5.4.1 - EMB-135 KE Ground Servicing Connections

Table 5.4.1 - EMB-135 KE Ground Servicing Connections

SYSTEM	DISTANCE AFT OF NOSE		DISTANCE FROM AIRPLANE CENTERLINE				HEIGHT ABOVE GROUND	
	ft-in	m	RIGHT SIDE		LEFT SIDE		MAXIMUM	
			ft-in	m	ft-in	m	ft-in	m
1. Hydraulic Power System Three Servicing Connections:								
A. Nose Servicing Panel	6-3	1.90	2-8	0.81	-	-	5-7	1.69
B. LH and RH Servicing Panels	60-2	18.35	1-9	0.53	1-9	0.53	5-4	1.63
2. Electrical Power System One External Power Supply Connection 28 V DC - 1600 A	7-5	2.26	-	-	3-1	0.94	5-7	1.71
3. Oxygen System One Servicing Panel	12-11	3.93	2-8	0.81	-	-	5-1	1.74
4. Fuel System								
A. Gravity Fuel Filler Port	49-6	15.08	17-10	5.43	17-10	5.43	6-1	1.84
B. Fuel Magnetic Stick	46-8	14.23	8-11	2.73	8-11	2.73	4-3	1.31
C. Fuel Magnetic Stick	49-5	15.07	16-4	4.98	16-4	4.98	5-6	1.57
D. Fuel Drain Valve	45-10	13.99	3.6	1.06	3-6	1.06	4-6	1.37
E. Fuel Dump Valve	45-11	13.74	5-1	1.55	5-1	1.55	3-8	1.12
F. Pressure Refueling/Defueling Panel	35-1	10.70	2-10	0.86	-	-	4-11	1.51
5. Air Conditioning System								
One Pressurization Ground Test Connection.	37-0	11.28	2-5	0.73	-	-	5-6	1.68
One Air Conditioning Ground Connection ...	32-9	9.98	1-6	0.46	-	-	5-7	1.72
6. Portable Water System	61-7	18.76	2-3	0.69	-	-	6-5	1.97
One Servicing Panel	58-11	18.76	0-2	0.69	-	-	5-12	1.97
7. Lavatory System Waste Servicing Panel	62-2	18.94	0-4	0.40	-	-	5-3	1.86
8. Powerplant Two Engine Oil Supply/Level Check Panels:								
A. LH Panel	69-11	21.31	-	-	6-1	1.84	10-1	3.06
B. RH Panel	69-11	21.31	7-8	2.35	-	-	10-1	3.06
Ground Connection for Engine Air Starting ..	72-3	22.01	0-11	0.27	-	-	5-2	1.57

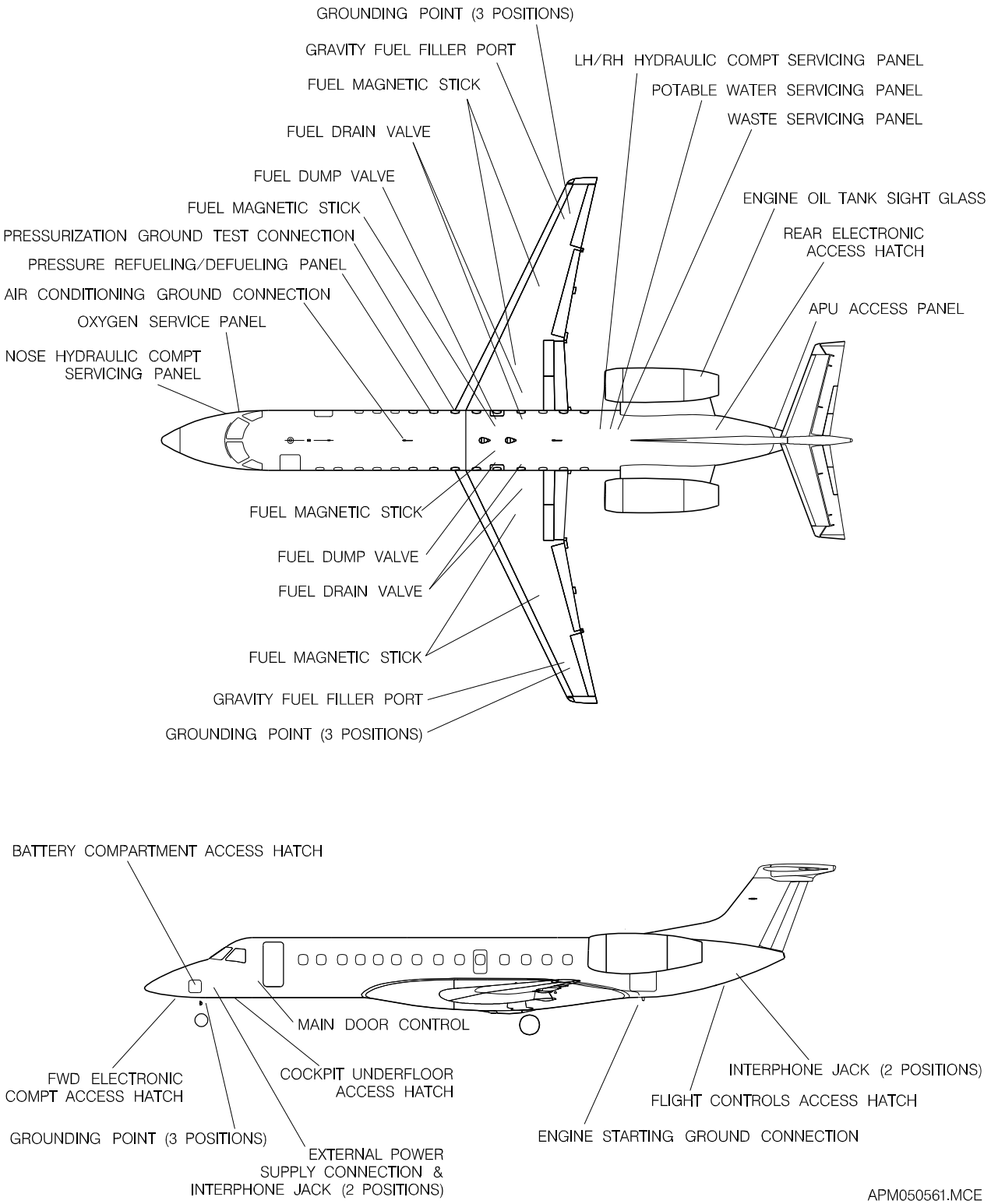

Figure 5.4.2 - EMB-135 KL Ground Servicing Connections

Table 5.4.2 - EMB-135 KL Ground Servicing Connections

SYSTEM	DISTANCE AFT OF NOSE		DISTANCE FROM AIRPLANE CENTERLINE				HEIGHT ABOVE GROUND	
			RIGHT SIDE		LEFT SIDE		MAXIMUM	
	ft-in	m	ft-in	m	ft-in	m	ft-in	m
1. Hydraulic Power System Three Servicing Connections:								
A. Nose Servicing Panel	6-3	1.90	2-8	0.81	-	-	5-7	1.69
B. LH and RH Servicing Panels	60-2	18.35	1-9	0.53	1-9	0.53	5-4	1.63
2. Electrical Power System One External Power Supply Connection 28 V DC - 1600 A	7-5	2.26	-	-	3-1	0.94	5-7	1.71
3. Oxygen System One Servicing Panel	12-11	3.93	2-8	0.81	-	-	5-1	1.74
4. Fuel System								
A. Gravity Fuel Filler Port	49-6	15.08	17-10	5.43	17-10	5.43	6-1	1.84
B. Fuel Magnetic Stick	46-8	14.23	8-11	2.73	8-11	2.73	4-3	1.31
C. Fuel Magnetic Stick	49-5	15.07	16-4	4.98	16-4	4.98	5-6	1.57
D. Fuel Magnetic Stick	44-4	13.52	1-1	0.35	1-1	0.35	3-6	1.06
E. Fuel Drain Valve	45-10	13.99	3-6	1.06	3-6	1.06	4-6	1.37
F. Fuel Drain Valve	46-1	14,06	1-4	0.41	1-4	0.41	3-6	1.06
G. Fuel Dump Valve	44-4	13.52	2-2	0.68	2-2	0.68	3-6	1.06
H. Pressure Refueling/Defueling Panel	35-1	10.70	2-10	0.86	-	-	4-11	1.51
5. Air Conditioning System								
One Pressurization Ground Test Connection	37-0	11.28	2-5	0.73	-	-	5-6	1.68
One Air Conditioning Ground Connection	32-9	9.98	1-6	0.46	-	-	5-7	1.72
6. Portable Water System	61-7	18.76	2-3	0.69	-	-	6-5	1.97
One Servicing Panel	58-11	18.76	0-2	0.69	-	-	5-12	1.97
7. Lavatory System Waste Servicing Panel	62-2	18.94	0-4	0.40	-	-	5-3	1.86
8. Powerplant Two Engine Oil Supply/Level Check Panels								
A. LH Panel	69-11	21.31	-	-	6-1/2	1.84	10-1/2	3.06
B. RH Panel	69-11	21.31	7-8	2.35	-	-	10-1/2	3.06
Ground Connection for Engine Air Starting	72-3	22-01	0-11	0.27	-	-	5-2	1.57

5.5 Engine Starting Pneumatic Requirements

EMB-145/EMB-135 PNEUMATIC STARTING SYSTEM
GROUND CART MINIMUM REQUIREMENTS

AE3007A SERIES ENGINES

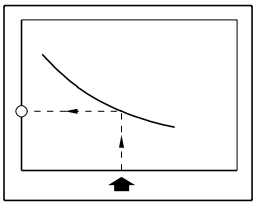

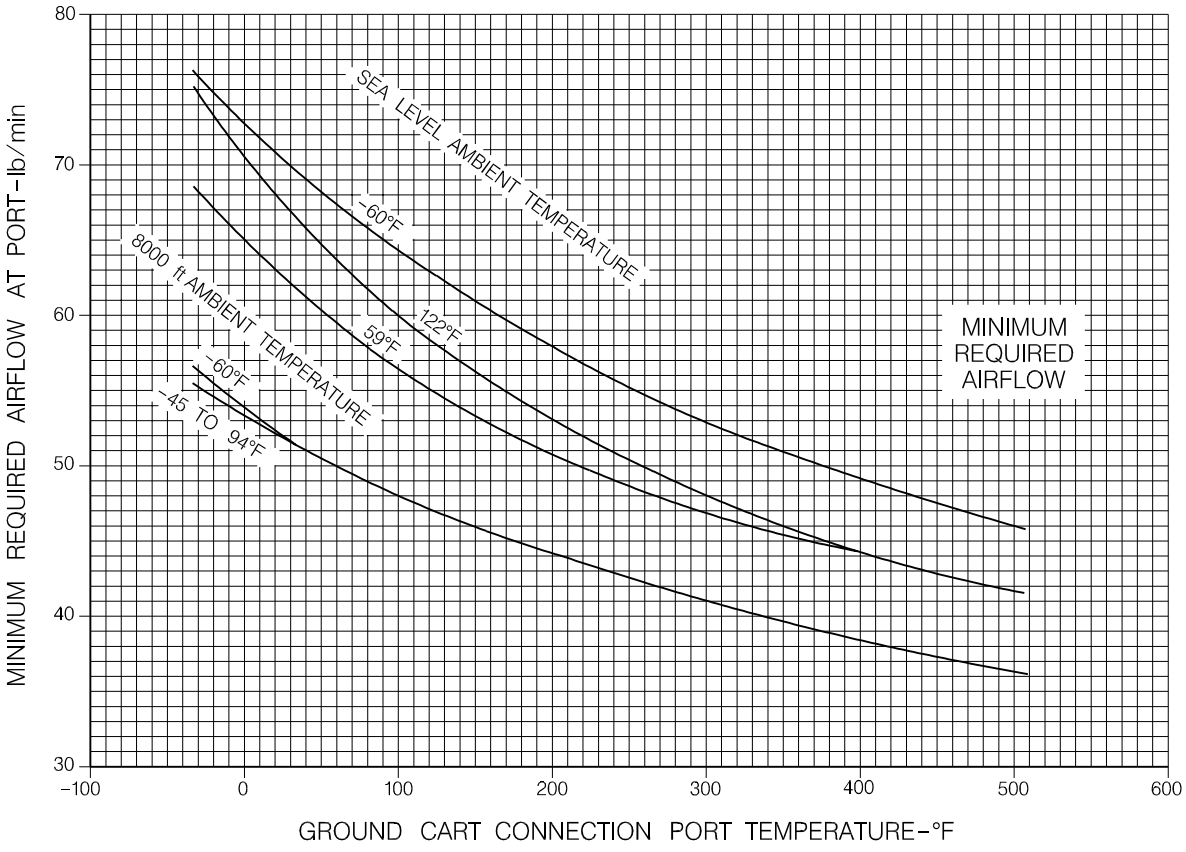

APM050024.MCE C

Figure 5.5.1 - Engine Starting Pneumatic Requirements - Airflow x Temperature

EMB-145/EMB-135 PNEUMATIC STARTING SYSTEM
GROUND CART MINIMUM REQUIREMENTS

AE3007A SERIES ENGINES

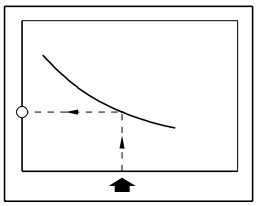

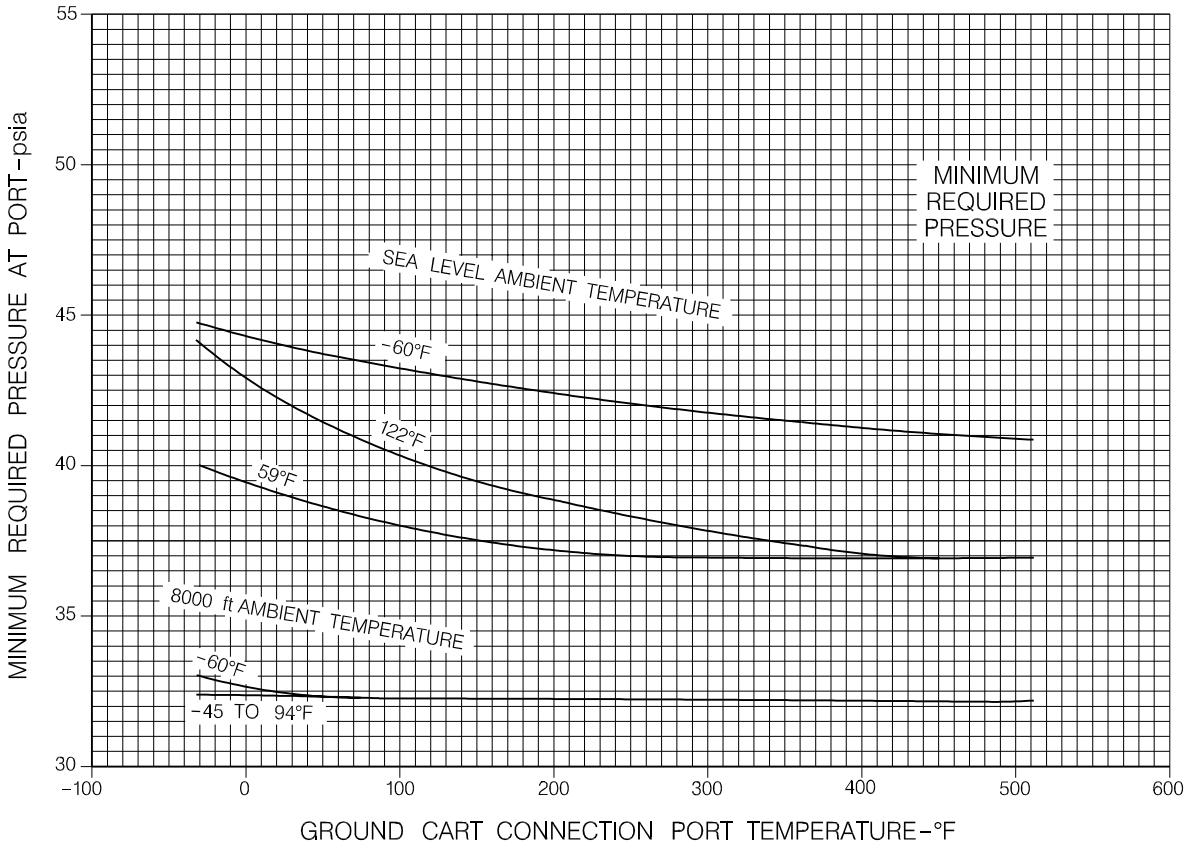

APM050025.MCE C

Figure 5.5.2 - Engine Starting Pneumatic Requirements - Pressure x Temperature

5.6 Ground Pneumatic Power Requirements

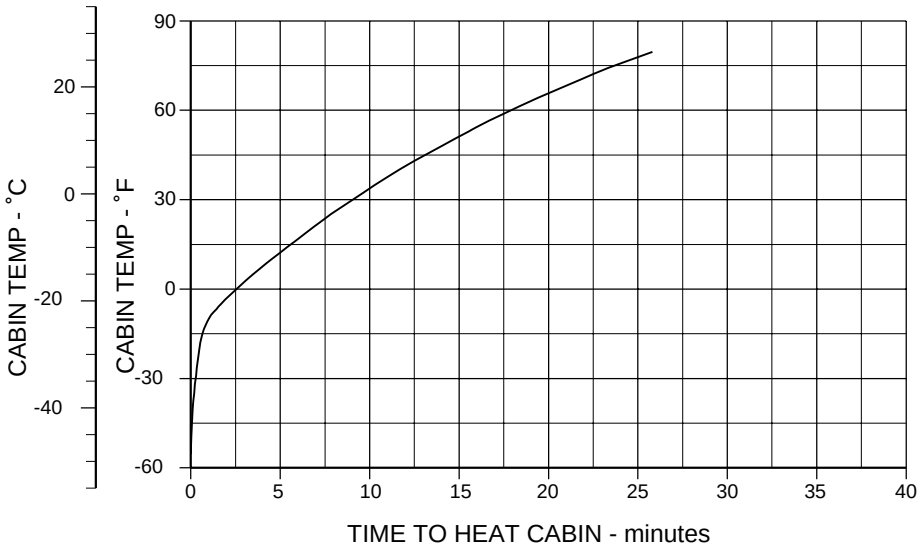

HEATING

Open door
Initial cabin temp: -54˚C (-65˚F)
Outside air temp: -54˚C (-65˚F)
Relative Humidity: 0%
No crew or passengers

Bleed air from APU:
28.5 kg/min, (62.8 lb/min)
469 kPa (68 psia)
2 operating packs (ECS)

Cabin airflow:
~ 28.5 kg/min (62.8 lb/min)
temp ~ 71˚C (160˚F)

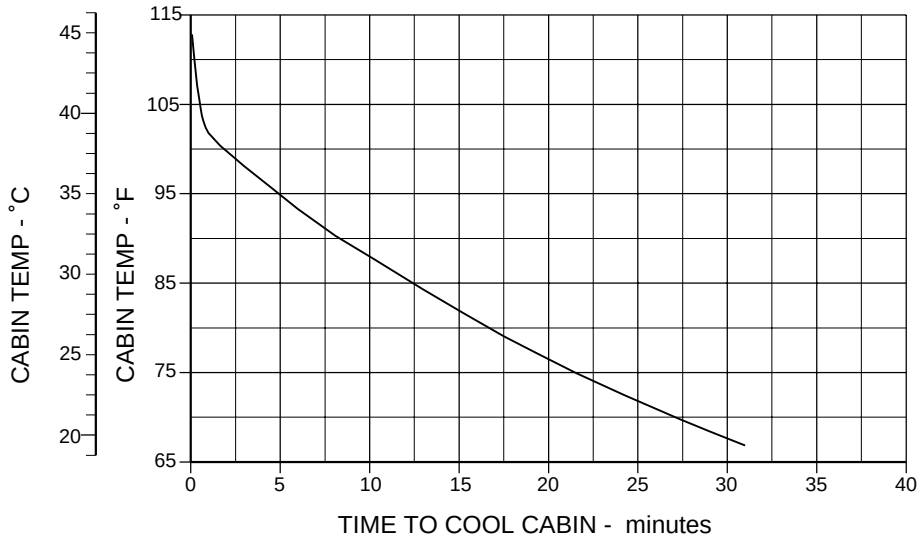

COOLING

Open door
Initial cabin temp: 47˚C (116˚F)
Outside air temp: 40˚C (104˚F)
Relative Humidity: 40%
2 crewmembers and no passengers

Bleed air from APU:
22.3 kg/min, (49 lb/min)
331 kPa (48 psia)
2 operating packs (ECS)

Cabin airflow:
~ 22.3 kg/min (49 lb/min)
temp ~ 0˚C (32˚F)

145APM050103.MCE A

Figure 5.6.1 - Ground Pneumatic Power Requirements (APU Mode)

5.7 Conditioned Air Requirements

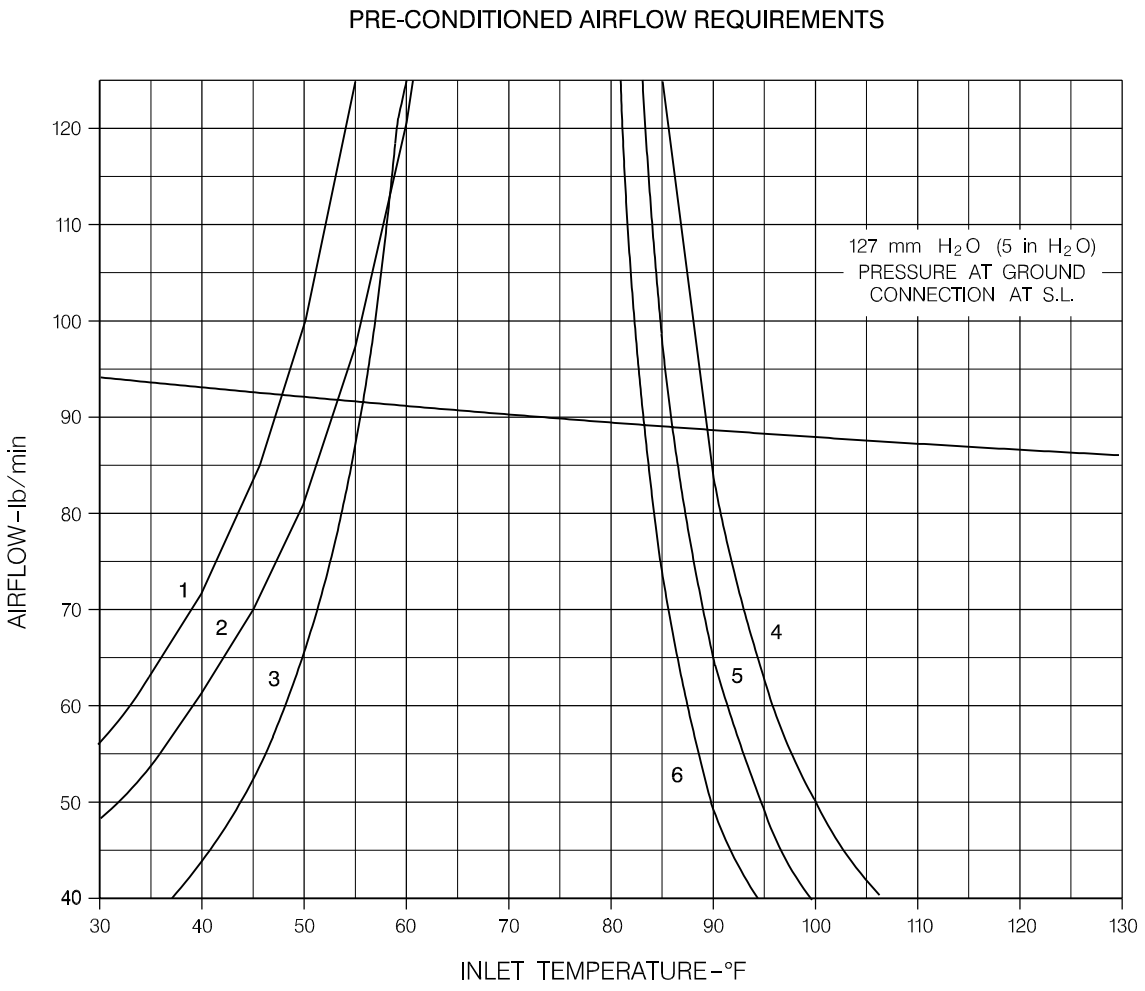

CONDITIONS	AMBIENT TEMP		SOLAR LOAD (BTU/h)	ELECTRICAL LOAD (BTU/h)	OCCUPANTS	CABIN TEMP	
	(°C)	(°F)				(°C)	(°F)
1	39	103	7950	10150	42	24	75
2	39	103	7950	10150	42	27	80
3	39	103	0	10150	4	21	70
4	−40	−40	0	0	4	24	75
5	−29	−20	0	0	4	24	75
6	−18	0	0	0	4	24	75

APM050553.MCE

Figure 5.7.1 - Pre-conditioned Airflow Requirements

5.8 Ground Towing Requirements

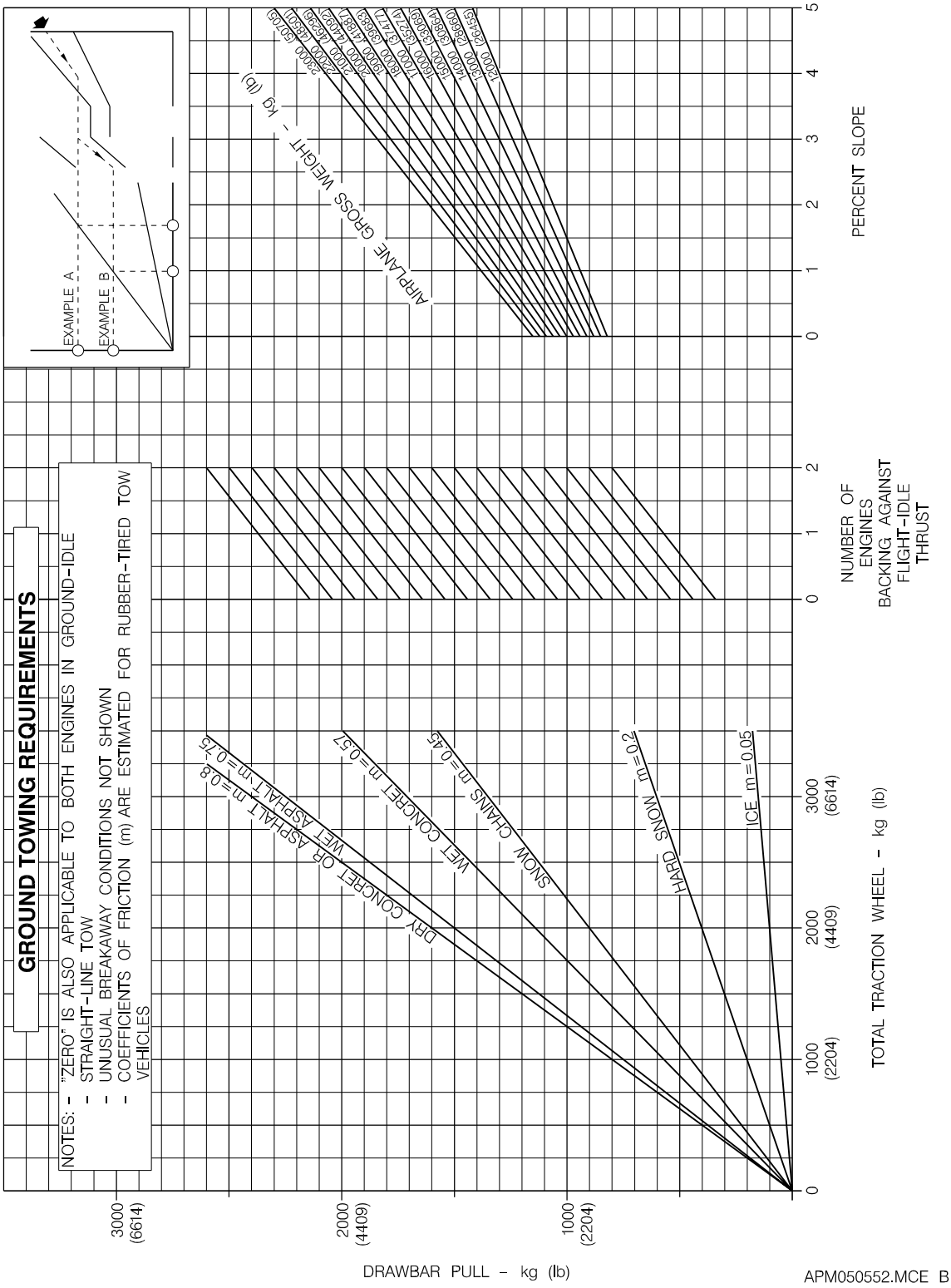

Figure 5.8.1 - Ground Towing Requirements

6. OPERATING CONDITIONS

This section presents graphics concerning:

– The jet engine exhaust velocities and temperatures;

– The airport and community noise levels;

– The hazard areas.

6.1 Engine Exhaust Velocities and Temperatures

TO-1 THRUST MODE, STATIC, SEA LEVEL

ISA + 15°C

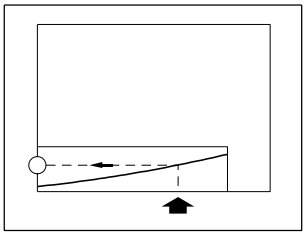

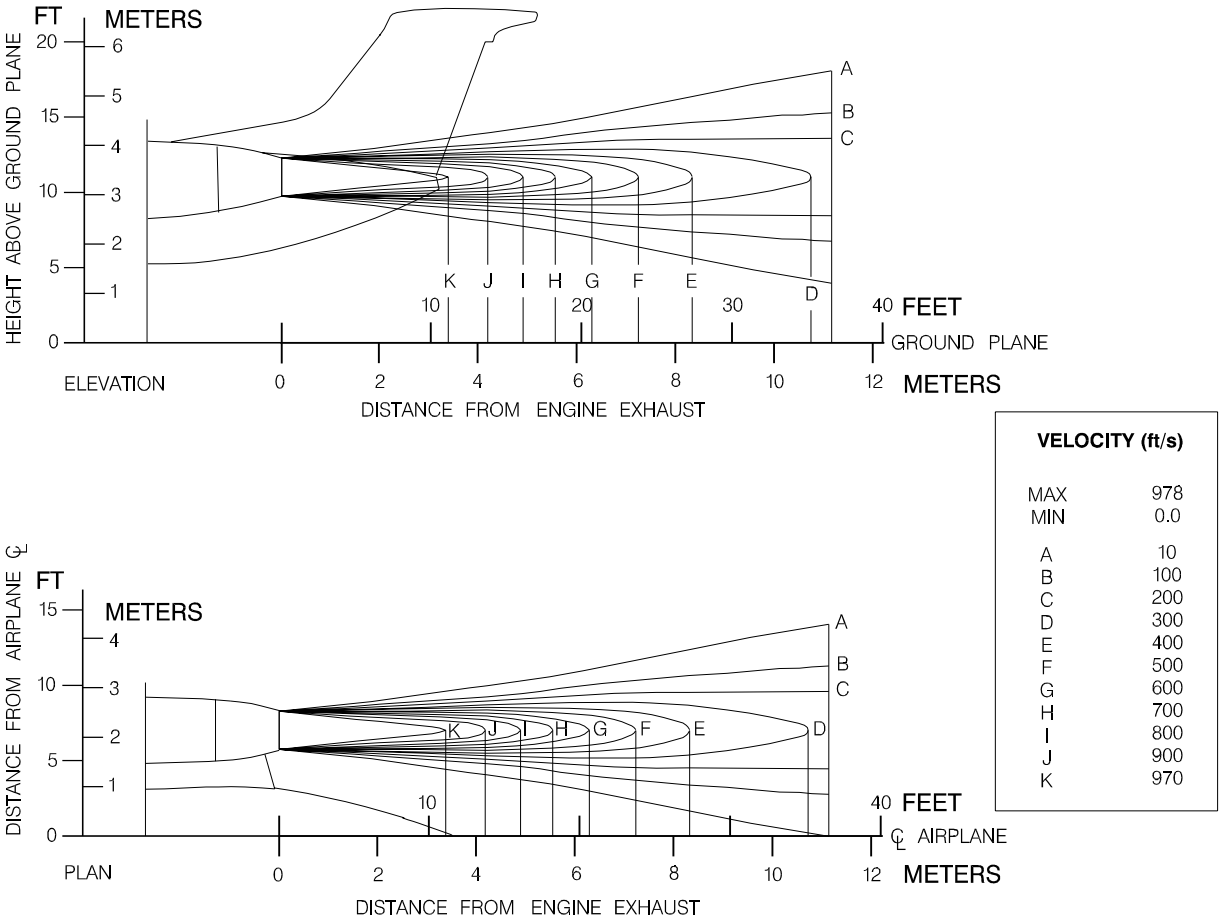

Figure 6.1.1 - Jet Wake Velocity Profile (T/O-1 Thrust Mode)

TO-1 THRUST MODE, STATIC, SEA LEVEL

ISA + 15°C

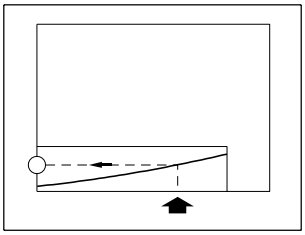

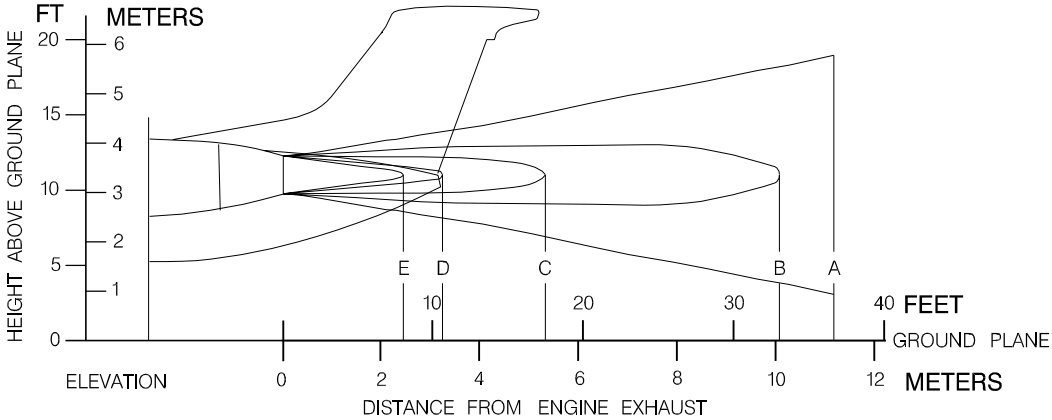

TEMPERATURE	(°F)	(°C)
MAX	252	122
MIN	86	30
A	90	32
B	140	60
C	190	88
D	240	116
E	250	121

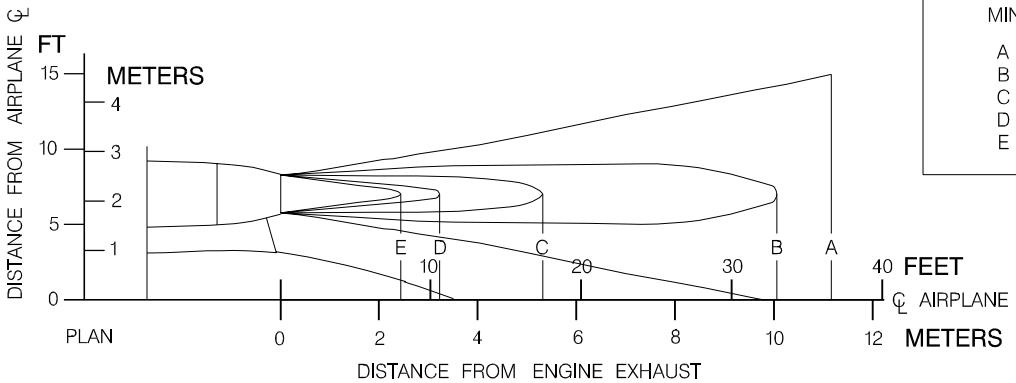

APM060019.MCE B

Figure 6.1.2 - Jet Wake Temperature Profile (T/O-1 Thrust Mode)

BREAKAWAY, STATIC, SEA LEVEL

ISA+15°C

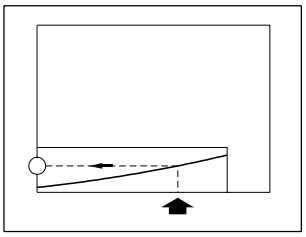

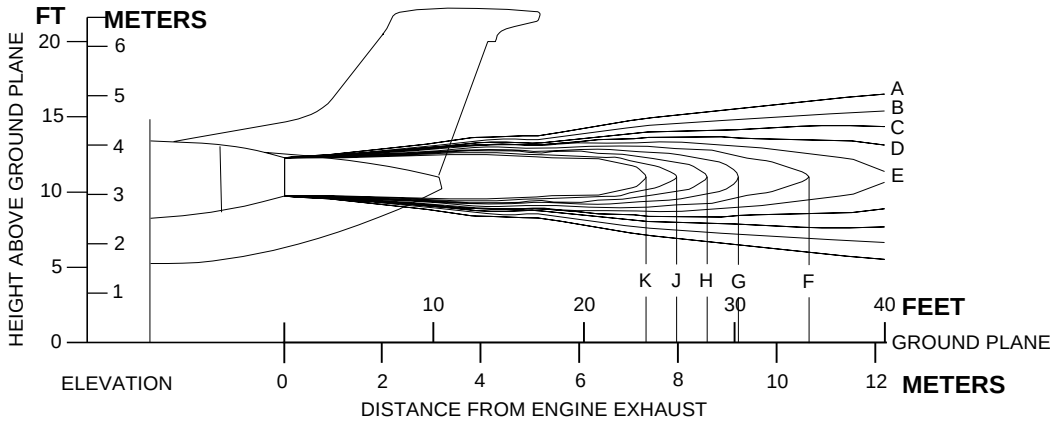

LEVEL	VELOCITY (ft/s)
A	50
B	75
C	100
D	125
E	150
F	175
G	200
H	225
J	250
K	274

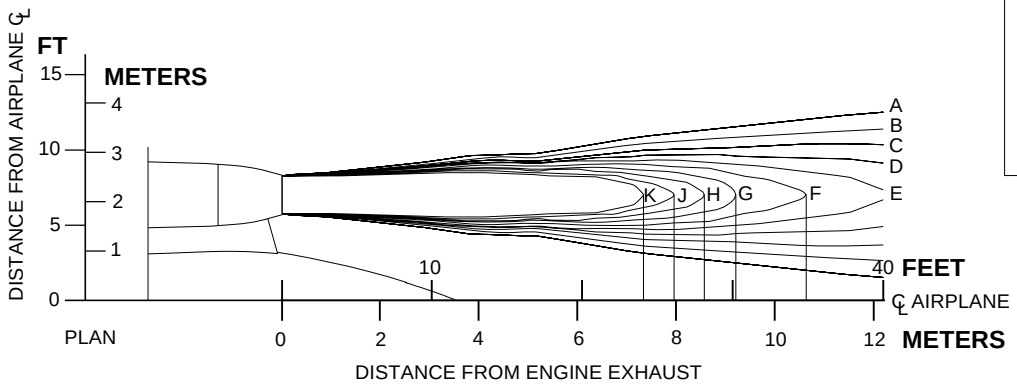

EM145APM060001B.DGN

Figure 6.1.3 - Jet Wake Velocity Profile (Breakaway)

BREAKAWAY, STATIC, SEA LEVEL

ISA+15°C

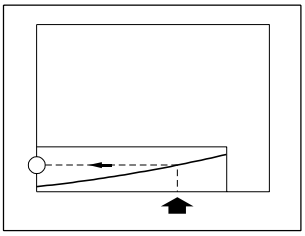

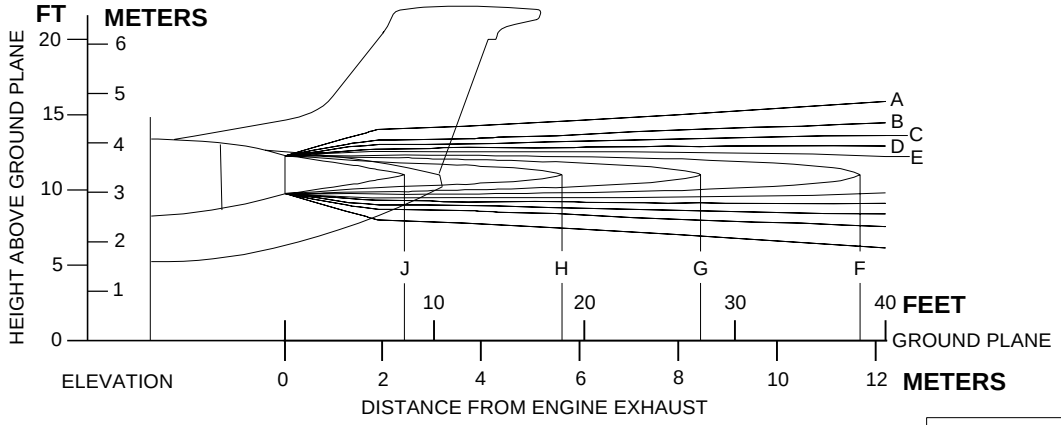

TEMPERATURE	(°C)	(°F)
A	16	60
B	21	70
C	27	80
D	32	90
E	38	100
F	43	110
G	49	120
H	54	130
J	60	140

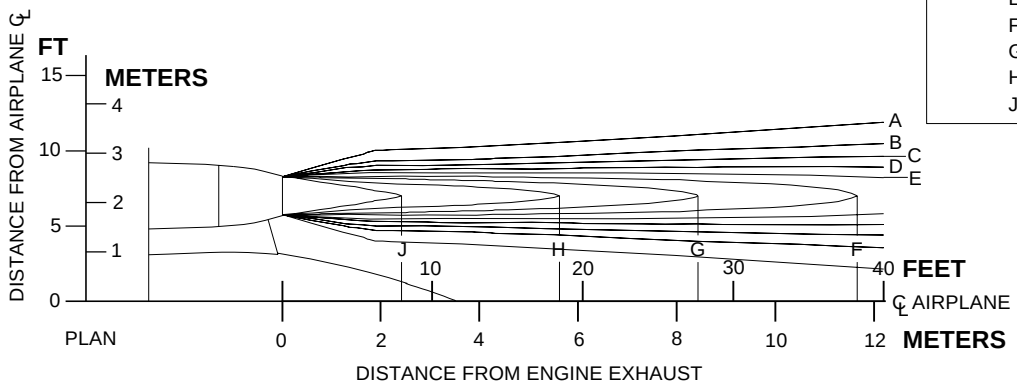

EM145APM060002B.DGN

Figure 6.1.4 - Jet Wake Temperature Profile (Breakaway)

IDLE THRUST MODE, STATIC, SEA LEVEL

ISA + 15°C

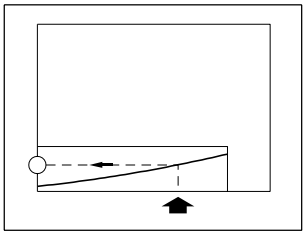

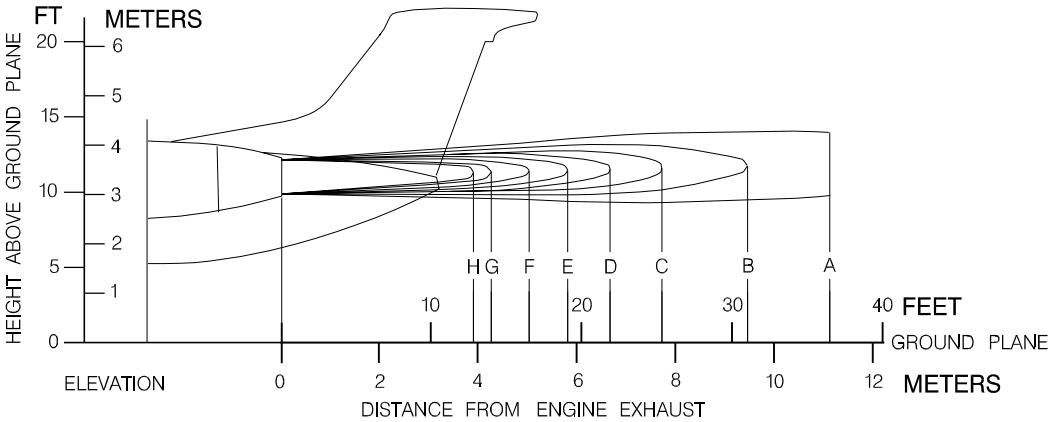

VELOCITY (ft/sec)	
MAX	220
MIN	0.0
A	50
B	75
C	100
D	125
E	150
F	175
G	200
H	210

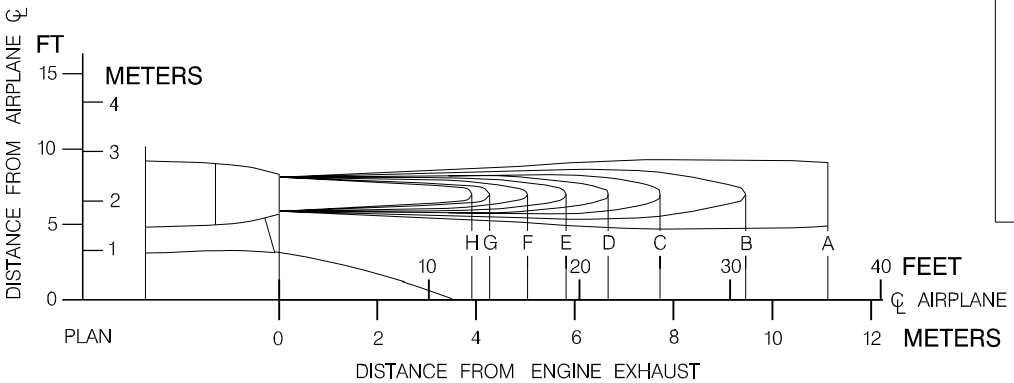

APM060020.MCE B

Figure 6.1.5 - Jet Wake Velocity Profile (Idle Thrust Mode)

IDLE THRUST MODE, STATIC, SEA LEVEL

ISA + 15°C

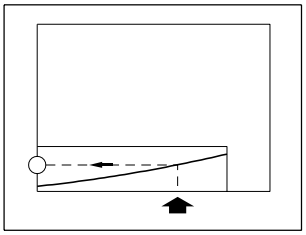

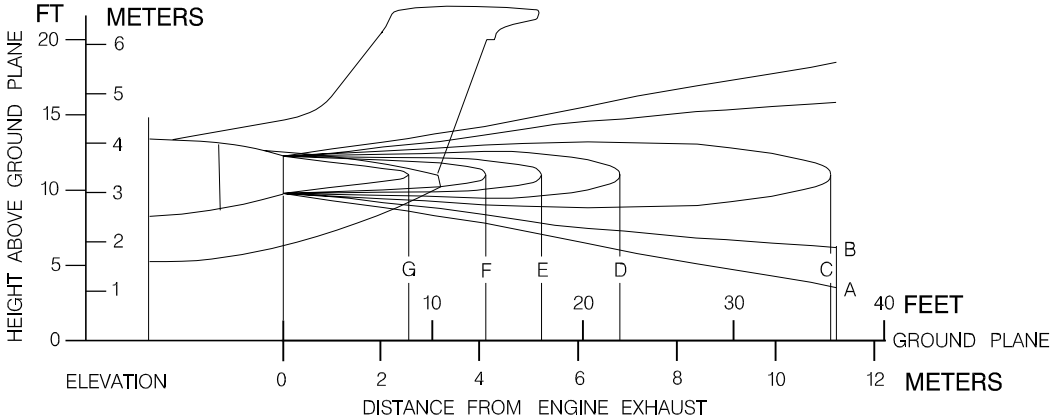

TEMPERATURE	(°F)	(°C)
MAX	201	94
MIN	86	30
A	90	32
B	100	38
C	120	49
D	140	60
E	160	71
F	180	82
G	200	93.5

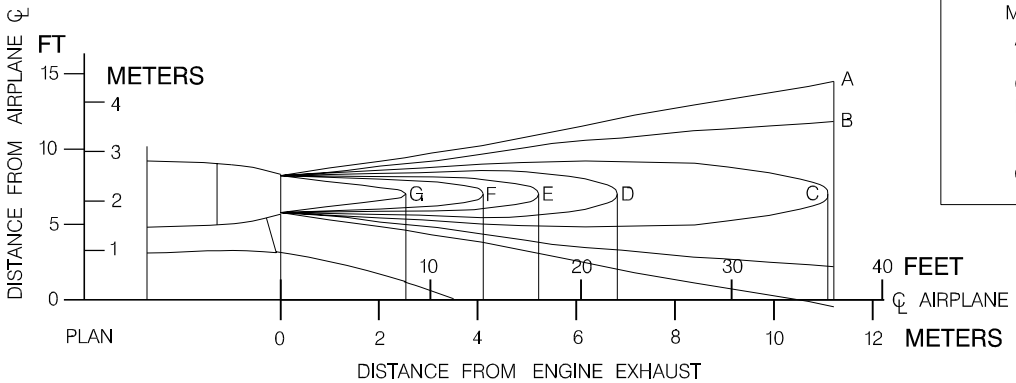

APM060021.MCE B

Figure 6.1.6 - Jet Wake Temperature Profile (Idle Thrust Mode)

6.2 Airport and Community Noise

Aircraft noise is a major concern for the airport and community planner. The airport is a basic element in the community's transportation system and, as such, is vital to its growth. However, the airport must also be a good neighbor, and this can be accomplished only with proper planning. Since aircraft noise extends beyond the boundaries of the airport, it is vital to consider the noise impact on the surrounding communities.

Many means have been devised to provide the planner with a tool to estimate the impact of airport operations. Too often they oversimplify noise to the point where the results become erroneous. Noise is not a simple matter; therefore, there are no simple answers.

The cumulative noise contour is an effective tool. However, care must be exercised to ensure that the contours, used correctly, estimate the noise resulting from aircraft operations conducted at an airport.

The size and shape of the single-event contours, which are inputs into the cumulative noise contours, are dependent upon numerous factors. They include:

6.2.1 Operational Factors

6.2.1.1 Aircraft Weight

Aircraft weight is dependent on the distance to be traveled, en-route winds, payload, and anticipated aircraft delay upon reaching the destination.

6.2.1.2 Engine Power Setting

The rates of ascent and descent and the noise levels emitted at the source are influenced by the power setting used.

6.2.1.3 Airport Altitude

Higher airport altitude will affect the engine performance and thus can influence noise.

6.2.2 Atmospheric Conditions - Sound Propagation

6.2.2.1 Wind

With stronger headwinds, the aircraft can take off and climb more rapidly relative to the ground. Also, winds can influence the distribution of noise in the surrounding communities.

6.2.2.2 Temperature and Relative Humidity

The absorption of noise in the atmosphere along the transmission path between the aircraft and the ground observer varies with both temperature and relative humidity.

6.2.3 Surface Condition - Shielding, Extra Ground Attenuation (EGA)

Terrain - If the ground slopes down after takeoff or up before landing, noise will be reduced since the aircraft will be at a higher altitude above the ground. Additionally, hills, shrubs, trees, and large buildings can act as sound buffers.

All of these factors can alter the shape and size of the contours appreciably. To demonstrate the effect of some of these factors, estimated noise level contours for two different operating conditions are shown

in figure 6.2.1. These contours reflect a given noise level upon a ground level plane at runway elevation.

As indicated from these data, the contour size varies substantially with operating and atmospheric conditions. Most aircraft operations are, of course, conducted at less than the maximum gross weights because the average flight distances are much shorter than the maximum aircraft range capability and the average load factors are less than 100%. Therefore, in developing cumulative contours for planning purposes, it is recommended that the airlines serving a particular city be contacted to provide operational information.

In addition, there are no universally accepted methods for developing aircraft noise contours for relating the acceptability of specific noise zones to specific land uses. It is therefore expected that the noise contour data for a particular aircraft and the impact assessment methodology change. To ensure that currently available information of this type is used in any planning study, it is recommended that it be obtained directly from the Office of Environmental Quality in the Federal Aviation Administration in Washington, D.C.

It should be noted that the contours shown herein are only for illustrating the impact of the operating and atmospheric conditions and do not represent the single-event contour of the family of aircraft described in this document. It is expected that the cumulative contours be developed as required by the planners using the data and methodology applicable to their specific study.

CONDITION 1

LANDING:

MAXIMUM DESIGN LANDING WEIGHT
10 knot HEADWIND
3° APPROACH
84°F
HUMIDITY 15%

TAKEOFF:

MAXIMUM DESIGN TAKEOFF WEIGHT
ZERO WIND
84°F
HUMIDITY 15%

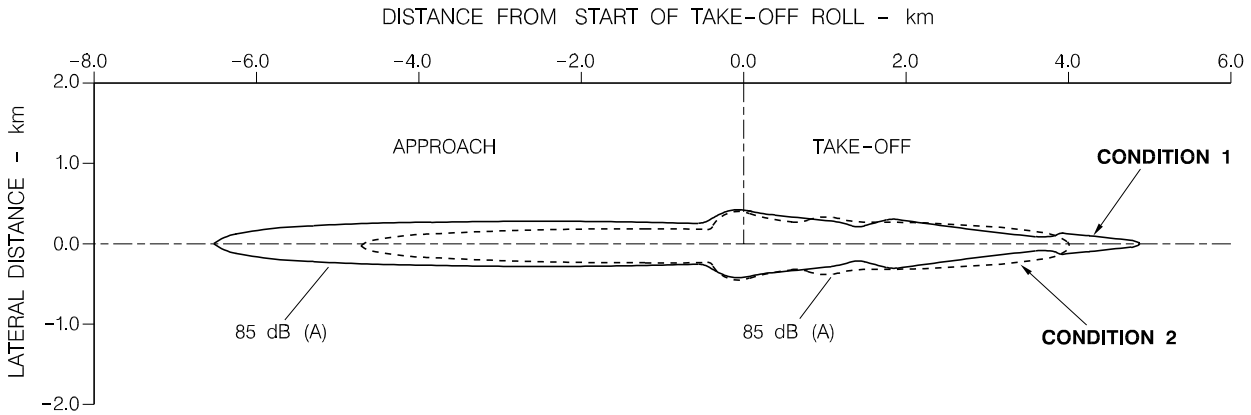

CONDITION 2

LANDING:

85% OF MAXIMUM DESIGN LANDING WEIGHT
10 knot HEADWIND
3° APPROACH
59°F
HUMIDITY 70%

TAKEOFF:

80% OF MAXIMUM DESIGN TAKEOFF WEIGHT
ZEROWIND
59°F
HUMIDITY 70%

APM060108.MCE B

Figure 6.2.1 - Airport and Community Noise Levels

6.3 Hazard Areas

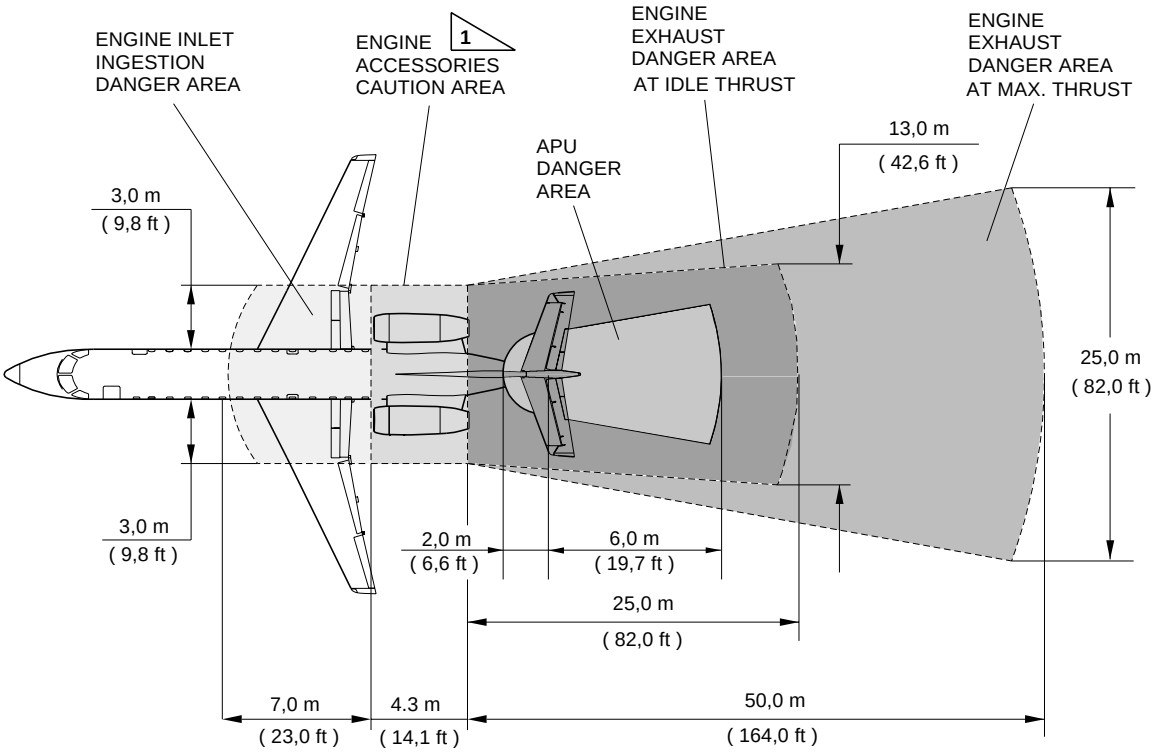

AIRCRAFT STATIC − SEA LEVEL I.S.A − NO WIND

1 WITH THE ENGINE RUNNING, THE ACCESS TO THIS AREA IS PERMITTED JUST WITH THE ENGINE IN IDLE SPEED OR LESS.

145APM060651B.MCE

Figure 6.3.1 - Hazard Areas

THIS PAGE LEFT BLANK INTENTIONALLY

7. PAVEMENT DATA

7.1 General Information

Pavement or Pavement Structure is defined as a structure consisting of one or more layers of processed materials.

The primary function of a pavement is to distribute concentrated loads so that the supporting capacity of the subgrade soil is not exceeded. The subgrade soil is defined as the material on which the pavement rests, whether embankment or excavation.

Several methods for design of airport pavements have been developed that differ considerably in their approach.

Generally speaking, the design methods are derived from observation of pavements in service or experimental pavements. Thus, the reliability of any method is proportional to the amount of experience of experimental verification behind the method, and all methods require a considerable amount of common sense and judgment on the part of the engineer who applies them.

A brief description of the following pavement charts will be helpful in their use for airport planning. Each airplane configuration is depicted with a minimum range of five loads imposed on the main landing gear to aid in the interpolation between the discrete values shown. The tire pressure used for the 140 models charts will follow the recommended tire deflection with the airplane loaded to its maximum ramp weight and with center of gravity position. The tire pressure where specified in the table and charts are values obtained under loaded conditions as certificated for commercial use.

Subsection 7.2 presents basic data on the landing gear footprint configuration, maximum design taxi loads, and tire sizes and pressures.

Maximum pavement loads for certain critical conditions at the tire-ground interfaces are shown in Subsection 7.3.

Pavement requirements for commercial airplanes are customarily derived from the static analysis of loads imposed on the main landing gear struts. The chart in Subsection 7.4 is provided in order to determine these loads throughout the stability limits of the airplane at rest on the pavement. These main landing gear loads are used to enter the pavement design charts which follow, interpolating load values where necessary.

The flexible pavement design curves (Subsection 7.5) are based on procedures set forth in Instruction Report No. S-77-1, ″Procedures for Development of CBR Design Curves″, dated June 1977, and as modified according to the methods described in FAA Advisory Circular 150/5320-6D, ″Airport Pavement Design and Evaluation″, dated July 7, 1995. Instruction Report No. S-77-1 was prepared by the U.S. Army Corps of Engineers Waterways Experiment Station, Soils and Pavements Laboratory, Vicksburg, Mississippi. The line showing 10,000 coverages is used to calculate Aircraft Classification Number (ACN).

The LCN conversion curves for flexible pavements (Subsection 7.6) have been built using procedures and curves in the International Civil Aviation Organization (ICAO) Aerodrome Design Manual, Part 3 - Pavements, Document 9157-AN/901, 1983.

The same chart includes the data of equivalent single-wheel load versus pavement thickness.

Rigid pavement design curves (Subsection 7.7) have been prepared with the use of the Westergaard Equation in general accordance with the procedures outlined in the 1955 edition of ″Design of Concrete Airport Pavement″ published by the Portland Cement Association, 33 W. Grand Ave., Chicago 10, Illinois, but modified to the new format described in the 1968 Portland Cement Association publication,

"Computer Program for Concrete Airport Pavement Design" (Program PDILB) by Robert G. Packard.

The following procedure is used to develop rigid pavement design curves such as that shown in Subsection 7.7.

1. Once the scale for the pavement thickness to the left and the scale for allowable working stress to the right have been established, an arbitrary load line is drawn representing the main landing gear maximum weight to be shown.

2. All values of the subgrade modulus (k-values) are then plotted.

3. Additional load lines for the incremental values of weight on the main landing gear are then established on the basis of the curve for k = 300, already established.

The LCN conversion curves for rigid pavements (Subsection 7.8) have been built using procedures and curves in (ICAO) Aerodrome Design Manual, Part 3 - Pavements, Document 9157-AN/901, 1983.

The same chart includes the data of equivalent single-wheel load versus radius of relative stiffness. Radius of relative stiffness values are obtained from Subsections 7.8.1 and 7.8.2.

The ACN/PCN system as referenced in Amendment 35 to ICAO Annex 14, "Aerodromes", 7th Edition, June 1976, provides a standardized international airplane/pavement rating system replacing the various S, T, TT, LCN, AUW, ISWL, etc., rating systems used throughout the world. ACN is the Aircraft Classification Number and PCN is the corresponding Pavement Classification Number. An aircraft having an ACN equal to or less than the PCN can operate without restriction on the pavement.

Numerically, the ACN is two times the derived single wheel load expressed in thousands of kilograms where the derived single wheel load is defined as the load on a single tire inflated to 1.25 Mpa (181 psi) that would have the same pavement requirements as the aircraft. Computationally, the ACN/PCN system uses PCA program PDILB for rigid pavements and S-77-1 for flexible pavements to calculate ACN values. The method of pavement evaluation is left up to the airport with the results of their evaluation presented as follows:

Table 7.1.1 - Pavement Evaluation

PAVEMENT TYPE	SUBGRADE CATEGORY	TIRE PRESSURE CATEGORY	METHOD
R - Rigid	A - High	W - No Limit	T - Technical
S - Flexible	B - Medium	X - to 1.75 Mpa (254 psi)	U - Using acft
	C - Low	Y - to 1.25 Mpa (181 psi)	
	D - Ultra Low	Z - to 0.5 Mpa (73 psi)	

Report example: PCN 80/R/B/X/T, where:

80 = Pavement Classification Number

R = Pavement Type: Rigid

B = Subgrade Category: Medium

X = Tire Pressure Category: Medium (limited to 1.5 Mpa)

T = Evaluation Method: Technical

Subsection 7.9 shows the aircraft ACN values for flexible pavements. The four subgrade categories are:

A. High Strength − CBR 15

B. Medium Strength − CBR 10

C. Low Strength − CBR 6

D. Ultra Low Strength − CBR 3

Subsection 7.10 shows the aircraft ACN values for rigid pavements. The four subgrade categories are:

A. High Strength − Subgrade k = 150 MN/m^3 (550 lb/in^3)

B. Medium Strength − k = 80 MN/m^3 (300 lb/in^3)

C. Low Strength − k = 40 MN/m^3 (150 lb/in^3)

D. Ultra Low Strength − k = 20 MN/m^3 (75 lb/in^3)

7.2 Footprint

		EMB-135 MODELS	
		KE	KL
MAXIMUM DESIGN TAXI WEIGHT	lb kg	44533 20200	46738 21200
PERCENT OF WEIGHT ON MAIN GEAR		SEE SUBSECTION 7.4	
NOSE TIRE SIZE		19.5 x 6.75-8	
NOSE TIRE PRESSURE	psi kg/cm^2	84 ± 2 5.91 ± 0.14	
MAIN GEAR TIRE SIZE		30 x 9.5-14	30 x 9.5-16
MAIN GEAR TIRE PRESSURE	psi kg/cm^2	145 ± 3 10.19 ± 0.21	153 ± 3 10.76 ± 0.21

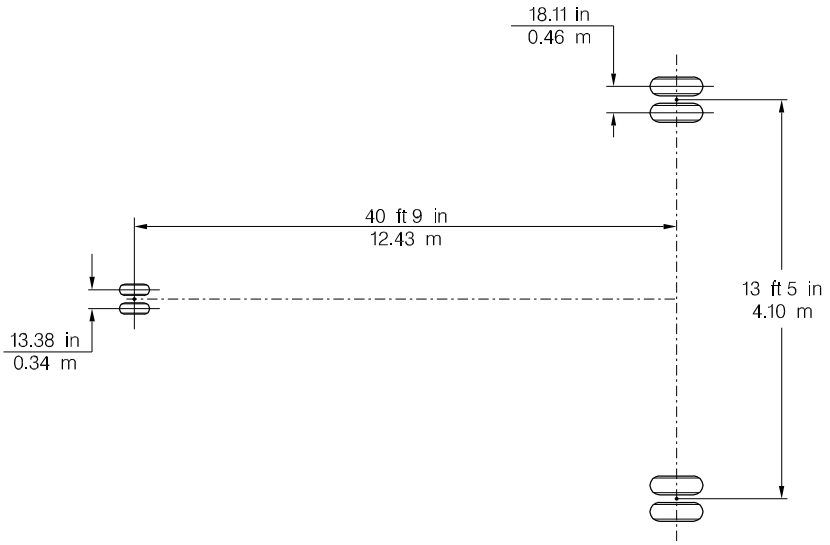

APM070812.MCE

Figure 7.2.1 - Footprint

7.3 Maximum Pavement Loads

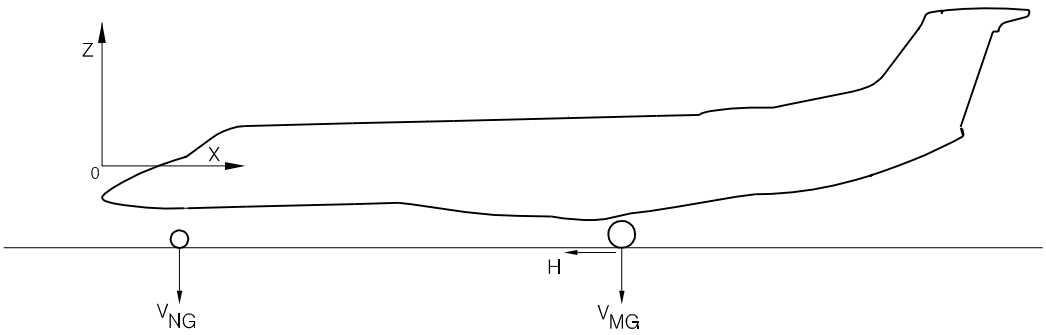

LEGEND: V_{NG} = MAXIMUM VERTICAL NOSE GEAR GROUND LOAD AT MOST FORWARD C.G.

V_{MG} = MAXIMUM VERTICAL MAIN GEAR GROUND LOAD AT MOST FOWARD C.G.

H = MAXIMUM HORIZONTAL GROUND LOAD FROM BRAKING.

NOTE: ALL LOADS CALCULATED USING AIRPLANE MAXIMUM DESING TAXI WEIGHT.

MODEL	MAXIMUM DESIGN TAXI WEIGHT		V_{NG}				V_{MG} (PER STRUT)		H (PER STRUT)			
			STATIC AT MOST FORWARD C.G.		STATIC + BRAKING 10 ft/sec^2 DECELERATION		MAXIMUM LOAD OCCURING AT STATIC AFT C.G.		AT STEADY BRAKING 10 ft/sec^2 DECELERATION		AT INSTANTANEOUS BRAKING (COEFF. OF FRICTION 0.8)	
	kg	lb	kg	lb	kg	lb	kg	lb	kg	lb	kg	lb
EMB-135 KE	20200	44533	2255	4905	3050	6724	9683	21347	2926	6451	8844	19498
EMB-135 KL	21200	46738	2335	5148	3199	7053	10363	22847	3072	6773	9284	20468

APM070813.MCE

Figure 7.3.1 - Maximum Pavement Loads

7.4 Landing Gear Loading on Pavement

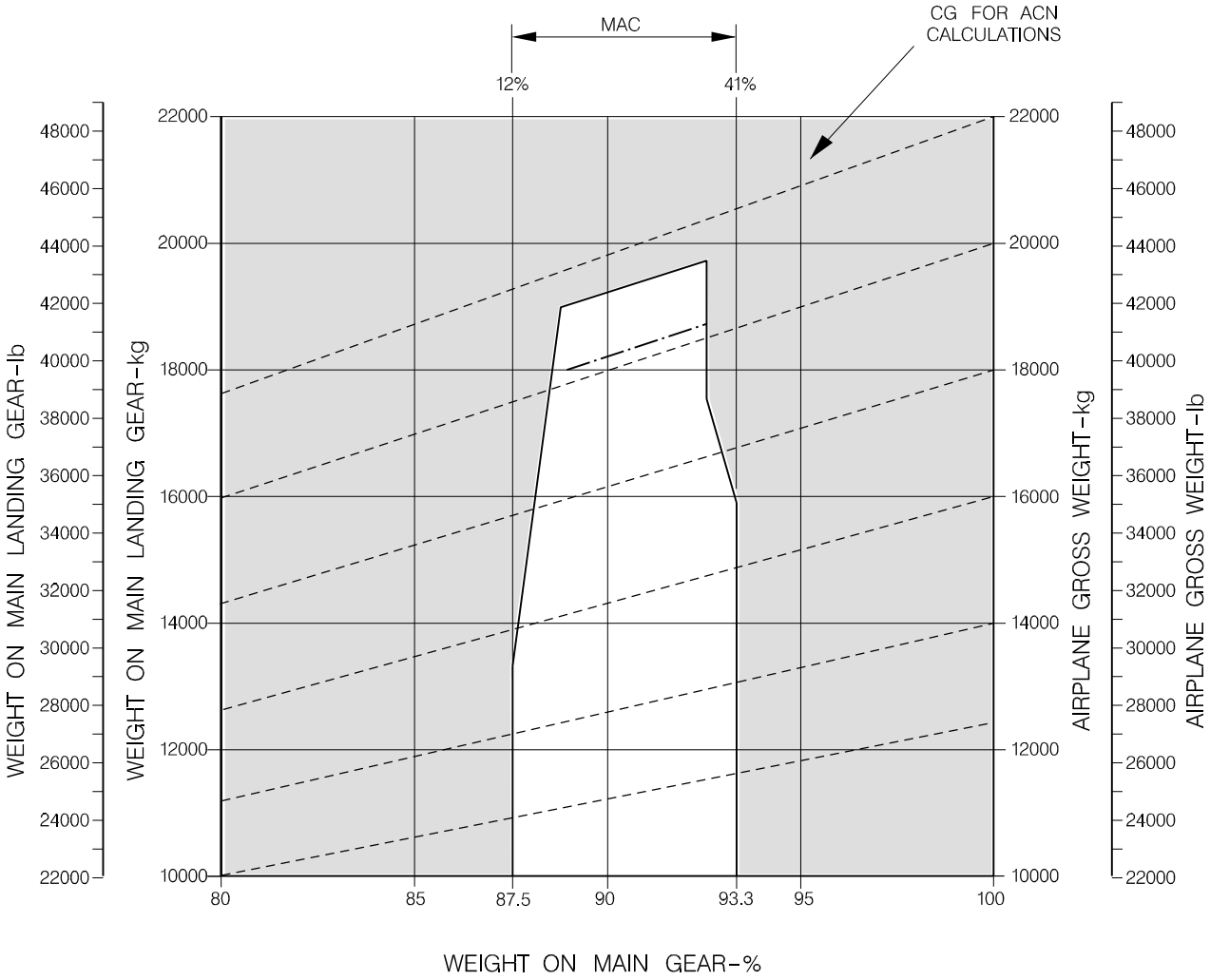

APM070801.MCE

Figure 7.4.1 - Landing Gear Loading on Pavement

7.5 Flexible Pavement Requirements - U.S. Army Corps of Engineers Design Method

NOTES: TIRES 30x9.5x14 16PR - TIRES PRESSURE 10.19 kg/cm2 (145 psi) (LOAD)

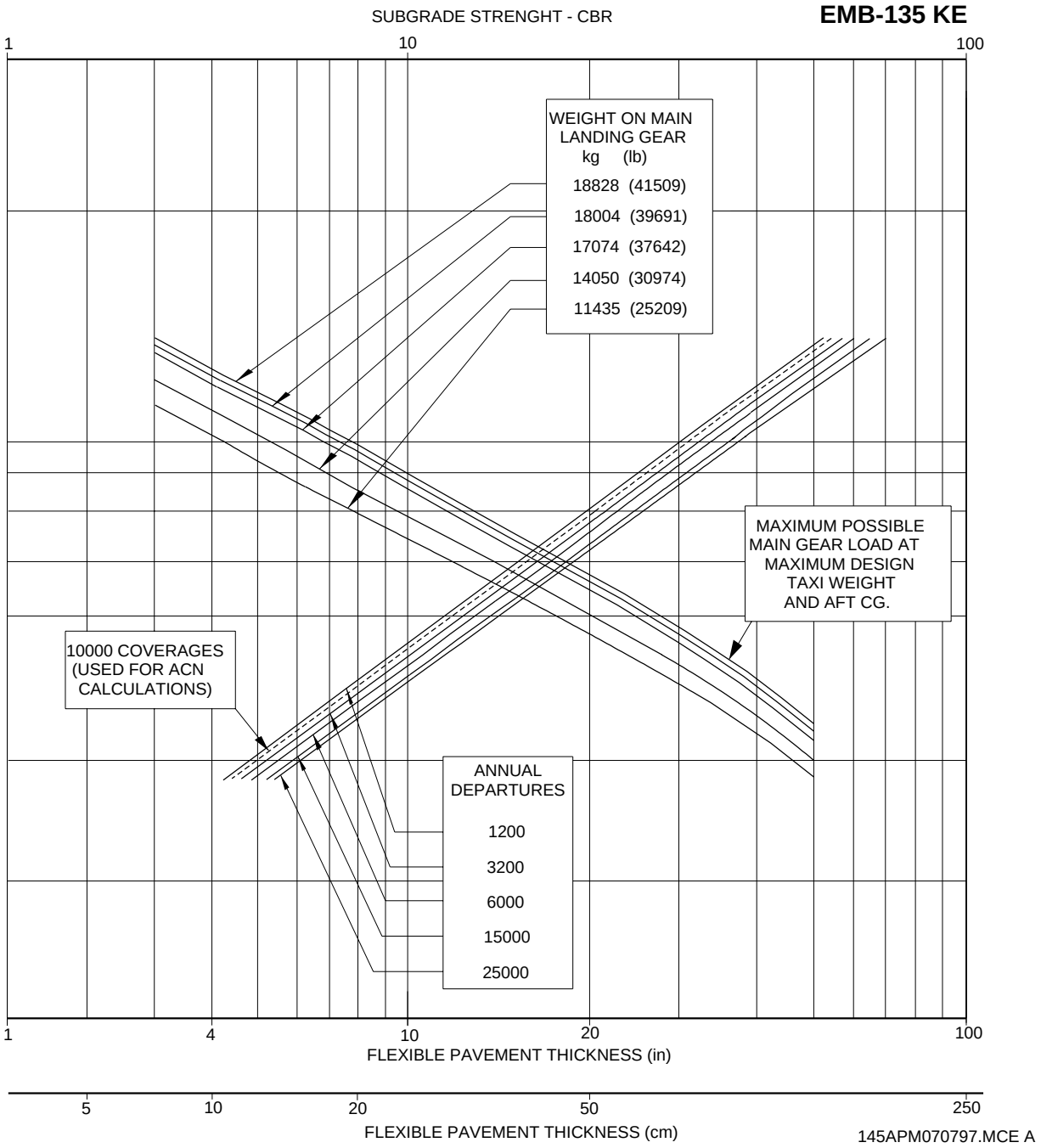

Figure 7.5.1 - Flexible Pavement Requirements - U.S. Army Corps of Engineers Design Method
Sheet 1

NOTES: TIRES 30 x 9.5 x 16 16PR AT 10.76 kg/cm2 (153 psi) (LOAD)

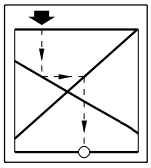

EMB-135 KL

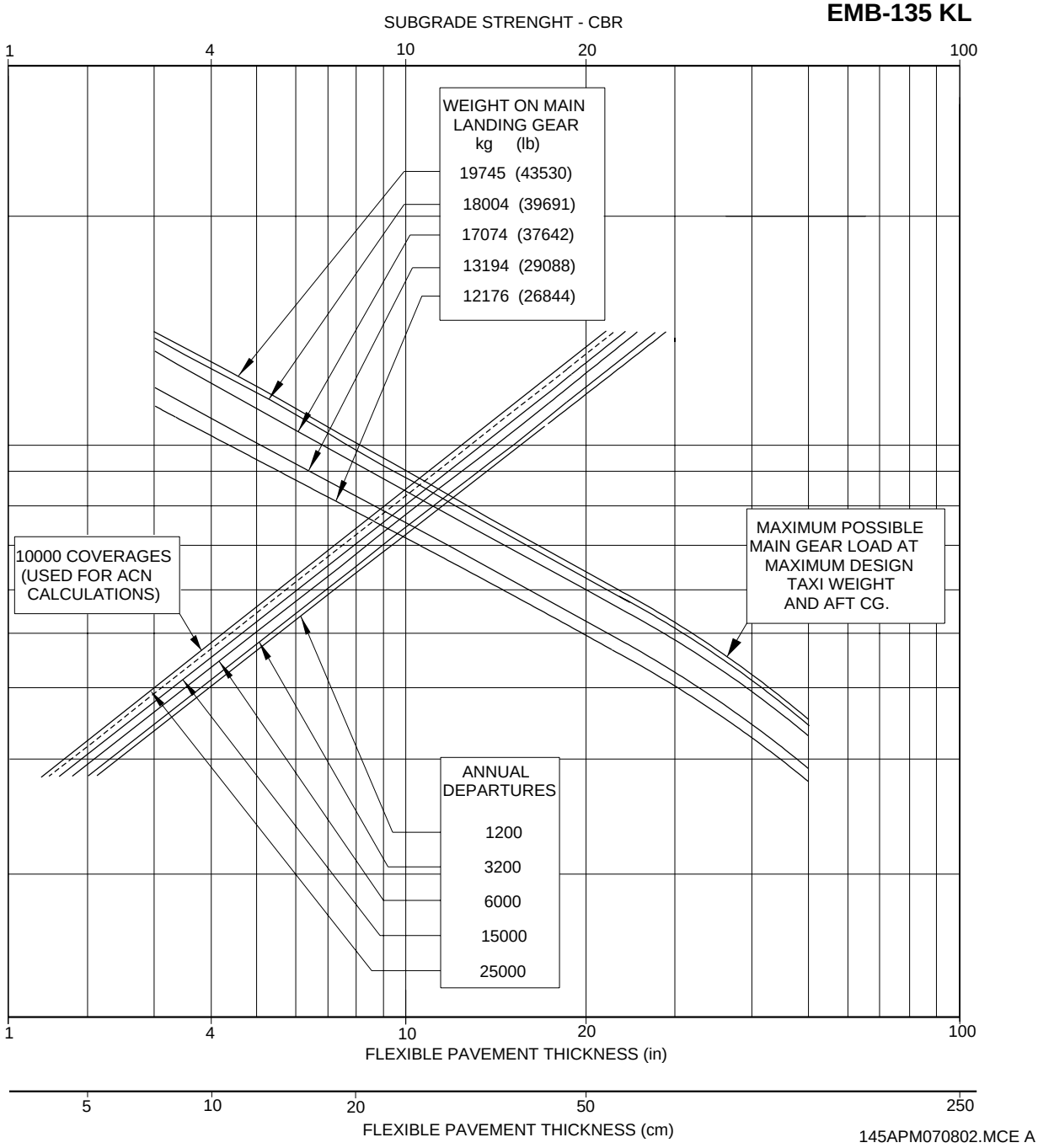

145APM070802.MCE A

Figure 7.5.1 - Flexible Pavement Requirements - U.S. Army Corps of Engineers Design Method
Sheet 2

7.6 Flexible Pavement Requirements - LCN Method

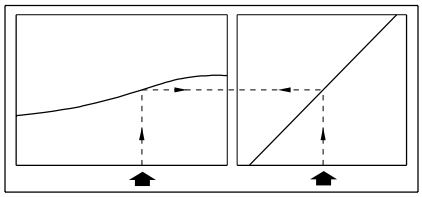

TIRES 30 x 9.5- 16PR AT 10.19 kgf/cm2 (145 psi) (LOADED)

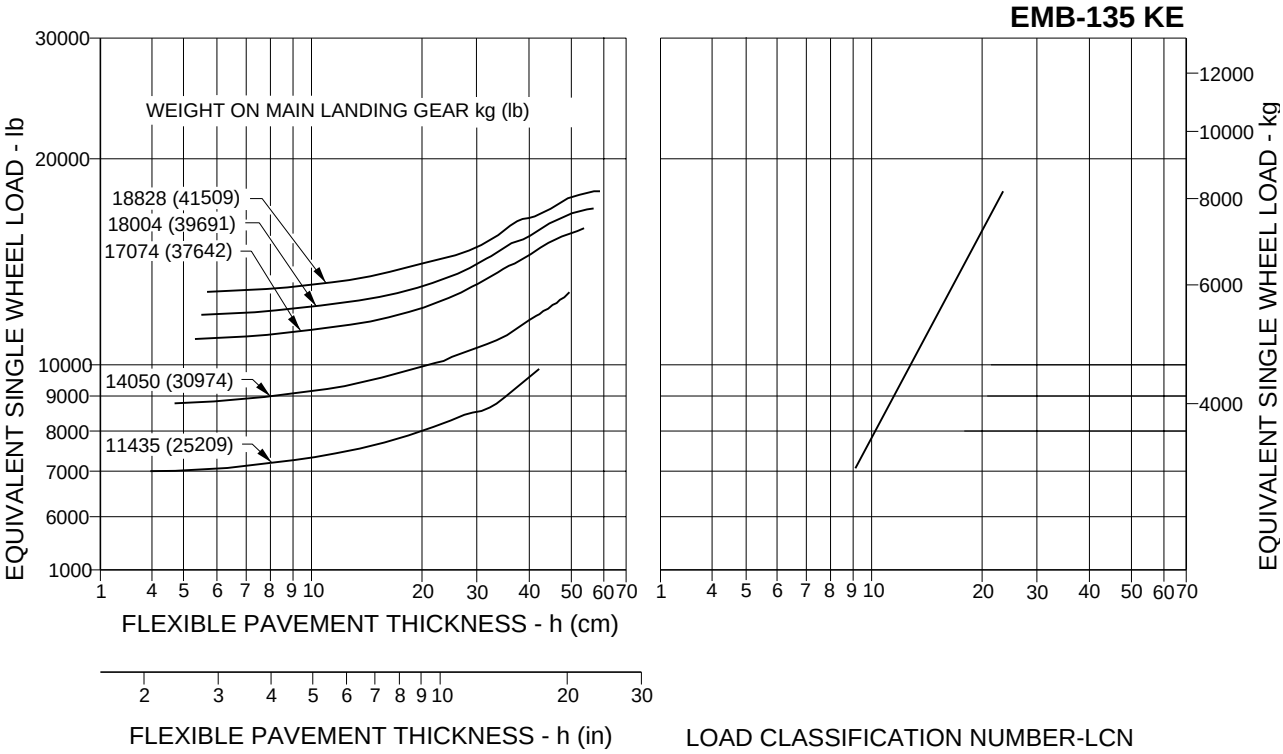

NOTE: EQUIVALENT SINGLE WHEEL LOADS ARE DERIVED BY METHODS SHOWN IN ICAO AERODROME MANUAL. PART 2, PAR. 4.1.3

145APM070795.MCE

Figure 7.6.1 - Flexible Pavement Requirements - LCN Method
Sheet 1

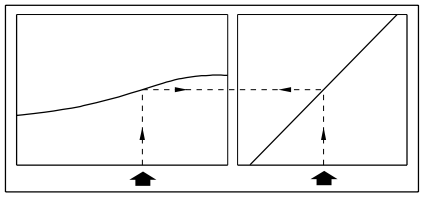

TIRES 30 x 9.5-16 16PR AT 10.76 kgf/cm2 (153 psi) (LOADED)

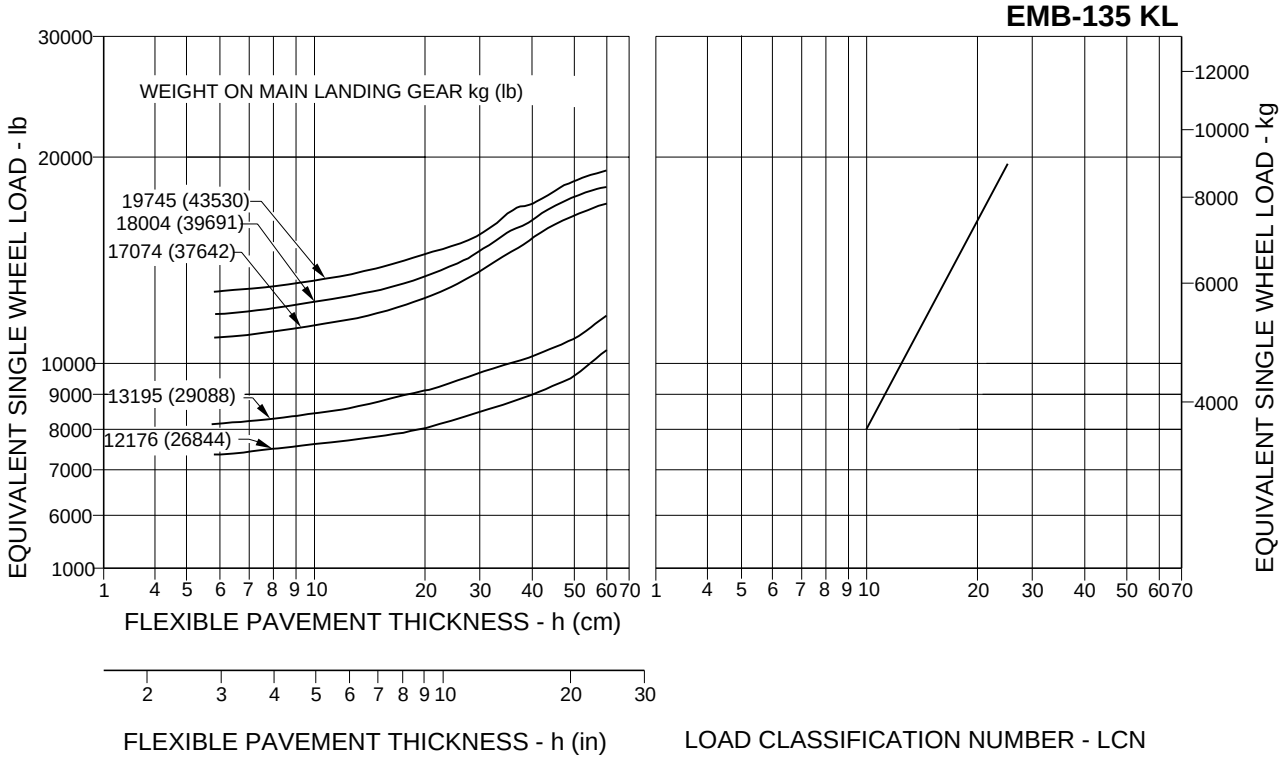

NOTE: EQUIVALENT SINGLE WHEEL LOADS ARE DERIVED BY METHODS SHOWN IN ICAO AERODROME MANUAL. PART 2, PAR. 4.1.3

145APM070796.MCE A

Figure 7.6.1 - Flexible Pavement Requirements - LCN Method
Sheet 2

7.7 Rigid Pavement Requirements - Portland Cement Association Design Method

NOTES:
- 30 x 9.5-14 16PR TIRES
- TIRE PRESSURE AT 10.19 kgf/cm^2 (145 psi) (LOADED)
- % WEIGHT OR MAIN GEARS 93.66 %

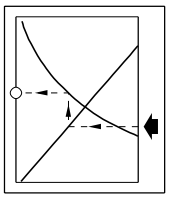

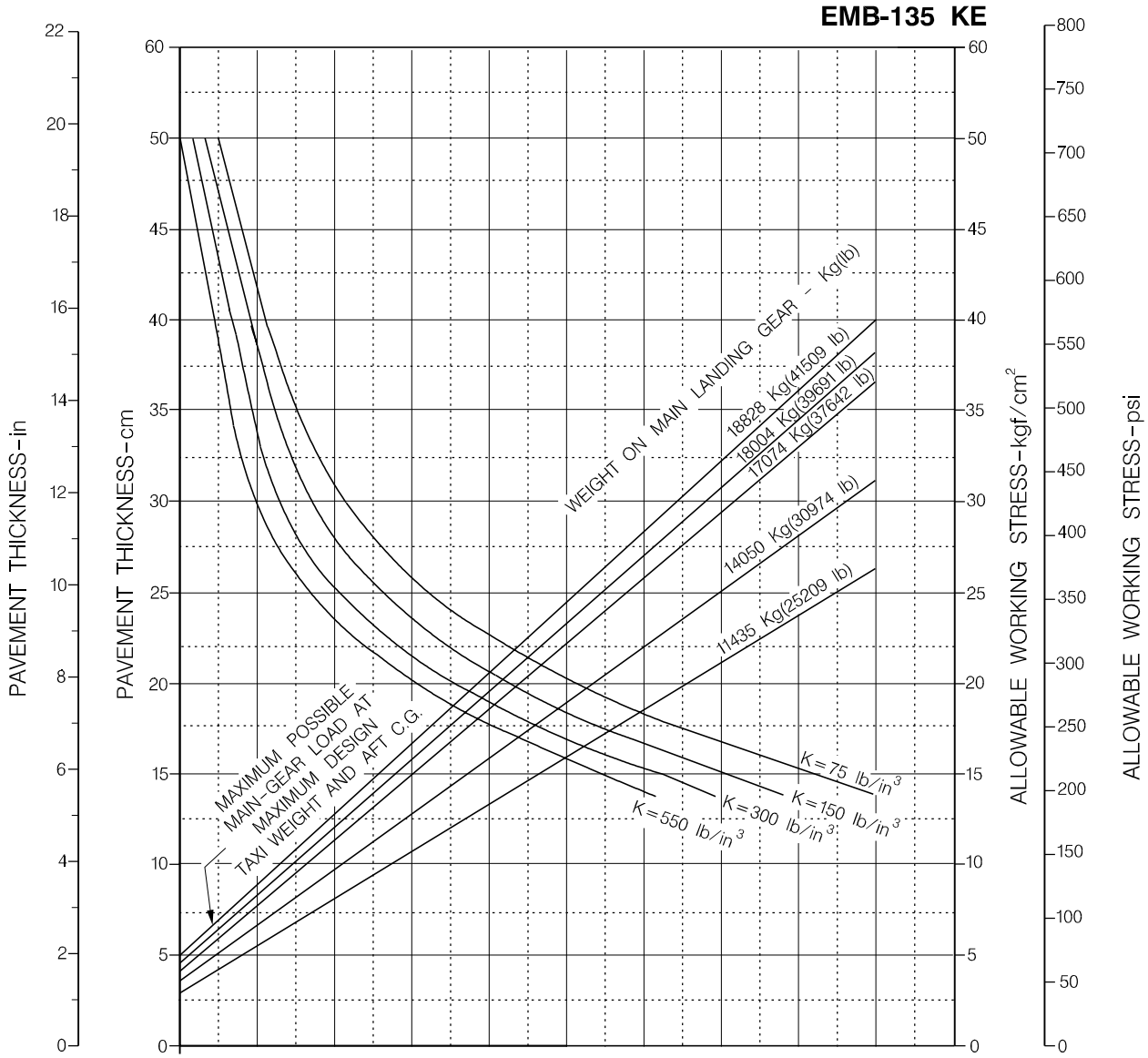

APM070798.MCE

Figure 7.7.1 - Rigid Pavement Requirements - Portland Cement Association Design Method Sheet 1

NOTES:
- 30 x 9.5-16 16PR TIRES
- TIRE PRESSURE AT 10.76 kgf/cm2 (153 psi) (LOADED)
- % WEIGHT OR MAIN GEARS 93.66%

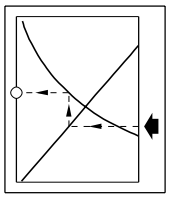

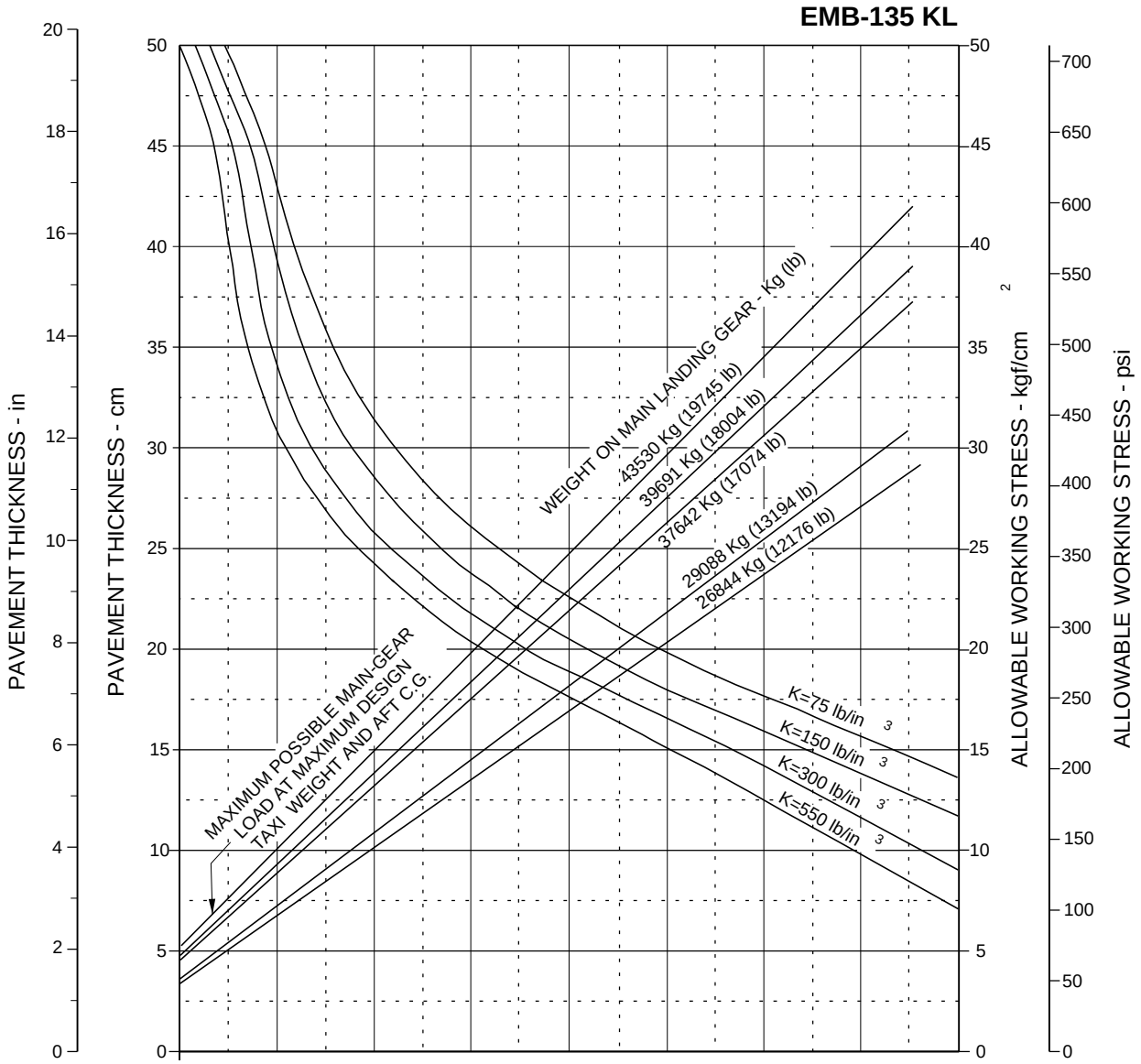

145APM070791.MCE A

Figure 7.7.1 - Rigid Pavement Requirements - Portland Cement Association Design Method Sheet 2

7.8 Rigid Pavement Requirements - LCN Method

To determine the airplane weight that can be accommodated on a particular rigid airport pavement, both the LCN of the pavement and the radius of relative stiffness must be known.

7.8.1 Radius of Relative Stiffness

RADIUS OF RELATIVE STIFFNESS (L)
VALUES IN INCHES

$$L = \sqrt[4]{\frac{Ed^3}{12(1-\mu^2)k}} = 24.1652 \sqrt[4]{\frac{d^3}{k}}$$

WHERE: E = YOUNG'S MODULUS = 4×10^6 psi
k = SUBGRADE MODULUS, lb/in.^{3}
d = RIGID-PAVEMENT THICKNESS. in.
μ = POISSON'S RATIO = 0.15

d(in)	k=75	k=100	k=150	k=200	k=250	k=300	k=350	k=400	k=500	k=550
6.0	31.48	29.30	26.47	24.63	23.30	22.26	21.42	20.72	19.59	19.13
6.5	33.43	31.11	28.11	26.16	24.74	23.64	22.74	22.00	20.80	20.31
7.0	35.34	32.89	29.72	27.65	26.15	24.99	24.04	23.25	21.99	21.47
7.5	37.22	34.63	31.29	29.12	27.54	26.32	25.32	24.49	23.16	22.61
8.0	39.06	36.35	32.85	30.57	28.91	27.62	26.58	25.70	24.31	23.74
8.5	40.88	38.04	34.37	31.99	30.25	28.91	27.81	26.90	25.44	24.84
9.0	42.67	39.71	35.88	33.39	31.58	30.17	29.03	28.08	26.55	25.93
9.5	44.43	41.35	37.36	34.77	32.89	31.42	30.23	29.24	27.65	27.00
10.0	46.18	42.97	38.83	36.14	34.17	32.65	31.42	30.39	28.74	28.06
10.5	47.90	44.57	40.28	37.48	35.45	33.87	32.59	31.52	29.81	29.11
11.0	49.60	46.16	41.71	38.81	36.71	35.07	33.75	32.64	30.87	30.14
11.5	51.28	47.72	43.12	40.13	37.95	36.26	34.89	33.74	31.91	31.16
12.0	52.94	49.27	44.52	41.43	39.18	37.44	36.02	34.84	32.95	32.17
12.5	54.59	50.80	45.90	42.72	40.40	38.60	37.14	35.92	33.97	33.17
13.0	56.22	52.32	47.27	43.99	41.61	39.75	38.25	36.99	34.99	34.16
13.5	57.83	53.82	48.63	45.26	42.80	40.89	39.35	38.06	35.99	35.14
14.0	59.43	55.31	49.98	46.51	43.98	42.02	40.44	39.11	36.99	36.12
14.5	61.02	56.78	51.31	47.75	45.16	43.15	41.51	40.15	37.97	37.08
15.0	62.59	58.25	52.63	48.98	46.32	44.26	42.58	41.19	38.95	38.03
15.5	64.15	59.70	53.94	50.20	47.47	45.36	43.64	42.21	39.92	38.98
16.0	65.69	61.13	55.24	51.41	48.62	46.45	44.70	43.23	40.88	39.92
16.5	67.23	62.56	56.53	52.61	49.75	47.54	45.74	44.24	41.84	40.85
17.0	68.75	63.98	57.81	53.80	50.88	48.61	46.77	45.24	42.78	41.78
17.5	70.26	65.38	59.08	54.98	52.00	49.68	47.80	46.23	43.72	42.70
18.0	71.76	66.78	60.34	56.15	53.11	50.74	48.82	47.22	44.66	43.61
18.5	73.25	68.17	61.60	57.32	54.21	51.80	49.84	48.20	45.59	44.51
19.0	74.73	69.54	62.84	58.48	55.31	52.84	50.84	49.17	46.51	45.41
19.5	76.20	70.91	64.08	59.63	56.39	53.88	51.84	50.14	47.42	46.30
20.0	77.66	72.27	65.30	60.77	57.47	54.91	52.84	51.10	48.33	47.19
20.5	79.11	73.62	66.52	61.91	58.55	55.94	53.83	52.06	49.23	48.07
21.0	80.55	74.96	67.74	63.04	59.62	56.96	54.81	53.01	50.13	48.95
21.5	81.99	76.30	68.94	64.16	60.68	57.97	55.78	53.95	51.02	49.82
22.0	83.41	77.63	70.14	65.28	61.73	58.98	56.75	54.89	51.91	50.69
22.5	84.83	78.95	71.34	66.38	62.78	59.99	57.72	55.82	52.79	51.55
23.0	86.24	80.26	72.52	67.49	63.83	60.98	58.68	56.75	53.67	52.41
23.5	87.64	81.56	73.70	68.59	64.86	61.97	59.63	57.67	54.54	53.26
24.0	89.04	82.86	74.87	69.68	65.90	62.96	60.58	58.59	55.41	54.11
24.5	90.43	84.15	76.04	70.76	66.92	63.94	61.52	59.50	56.28	54.95
25.0	91.81	85.44	77.20	71.84	67.95	64.92	62.46	60.41	57.14	55.79

APM070043.MCE A

Figure 7.8.1 - Radius of Relative Stiffness

7.8.2 Radius of Relative Stiffness (other values)

The table of section 7.8.1 presents the (RRS) Radius of Relative Stiffness values based on Young's modulus (E) of 4,000,000 psi and Poisson's ratio (μ) of 0.15.

For convenience in finding this Radius based on other values of E and μ, the curves of section 7.8.3 are included.

For example, to find an RRS value based on an E of 3,000,000 psi, the ″E″ factor of 0.931 is multiplied by the RRS value found in figure 7.8.1. The effect of the variations of μ on the RRS value is treated in a similar manner.

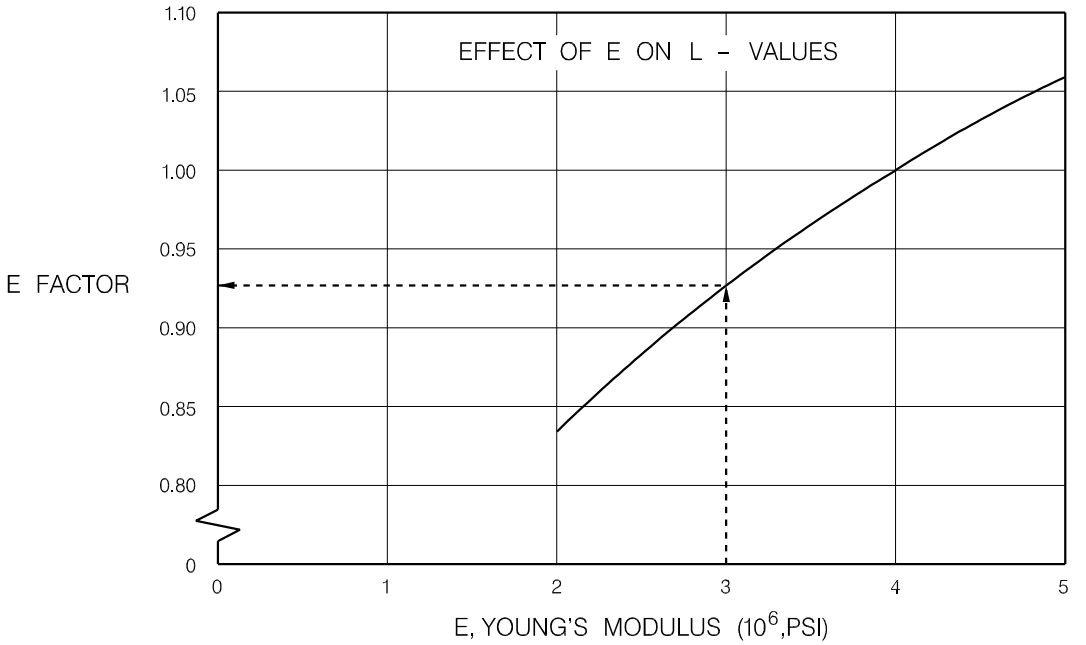

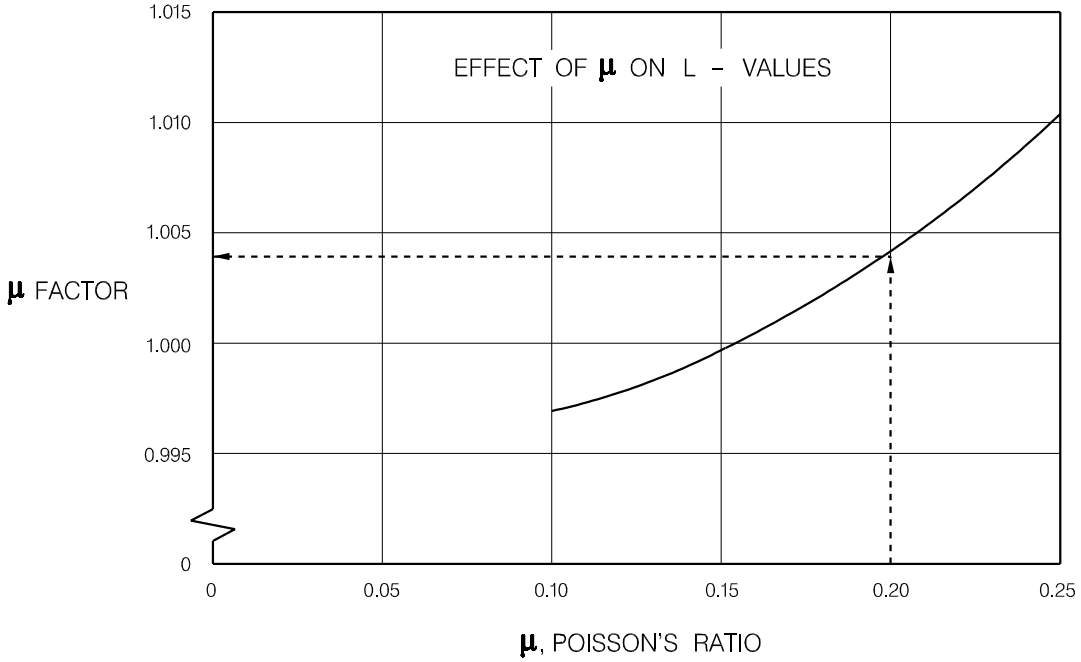

NOTE: BOTH CURVES ON THIS PAGE ARE USED TO ADJUST THE "L"- VALUES.

APM070027.MCE A

Figure 7.8.2 - Radius of Relative Stiffness (other values)

7.8.3 Rigid Pavement Requirements - LCN Method

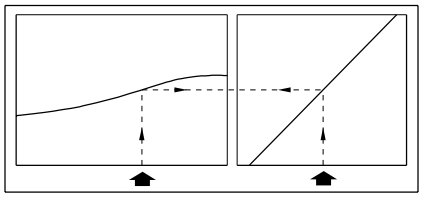

TIRES 30 x 9.5-14 16PR AT 10.19 kgf/cm2 (145psi) (LOADED)

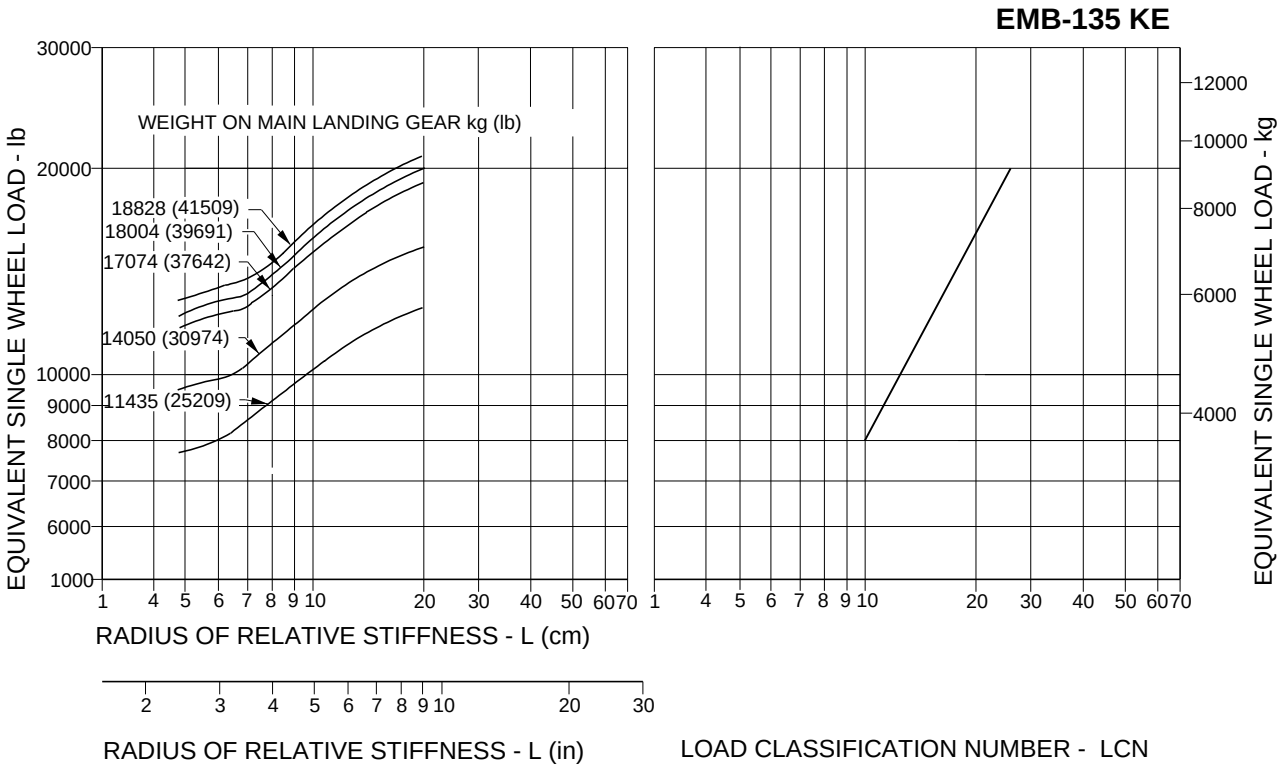

NOTE: EQUIVALENT SINGLE WHEEL LOADS ARE DERIVED BY METHODS SHOWN IN ICAO AERODROME MANUAL. PART 2, PAR. 4.1.3

145APM070799.MCE

Figure 7.8.3 - Rigid Pavement Requirements - LCN Method
Sheet 1

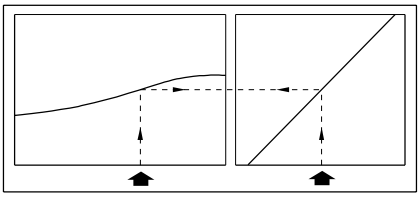

TIRES 30 x 9.5-16 16PR AT 10.76 kgf/cm2 (153 psi) (LOADED)

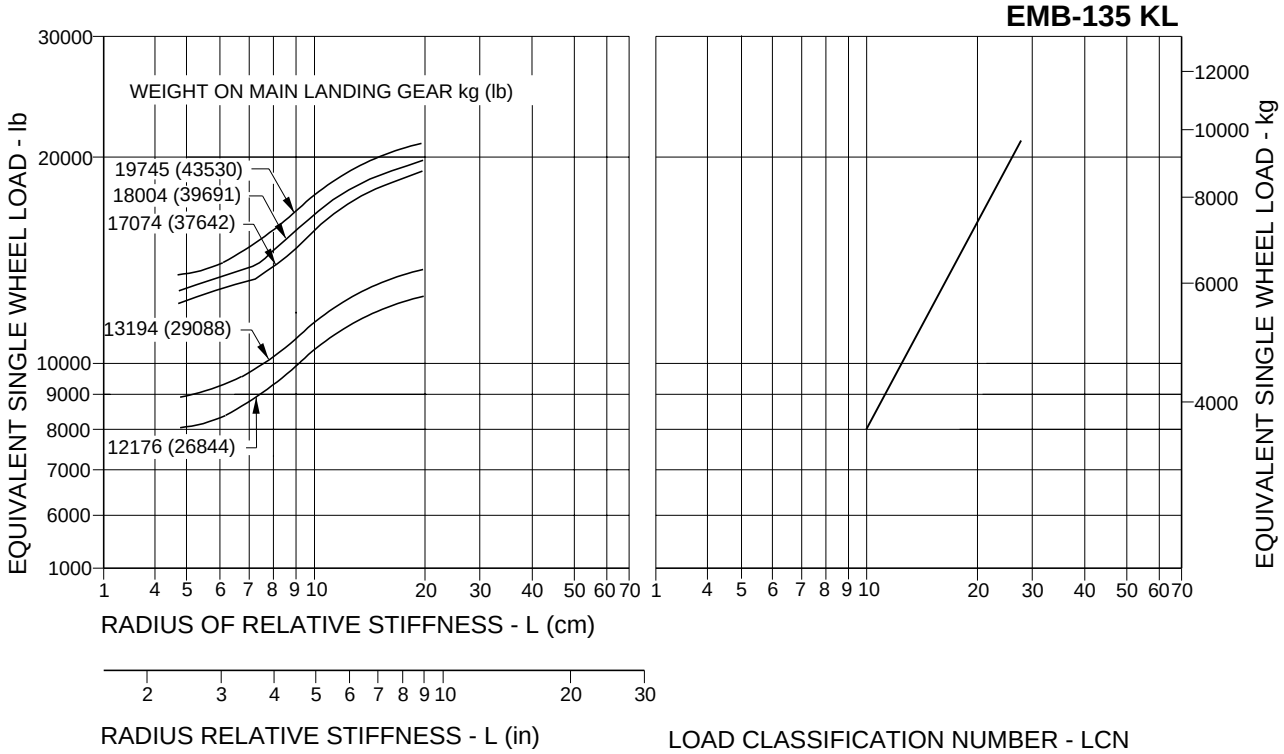

NOTE: EQUIVALENT SINGLE WHEEL LOADS ARE DERIVED BY METHODS SHOWN IN ICAO AERODROME MANUAL. PART 2, PAR. 4.1.3

145APM070800.MCE A

Figure 7.8.3 - Rigid Pavement Requirements - LCN Method
Sheet 2

wipapm1521

7.9 ACN/PCN Reporting System - Flexible and Rigid Pavements

To determine the ACN of an aircraft on flexible or rigid pavement, both the aircraft gross weight and the subgrade strength must be known.

NOTE: An aircraft with an ACN equal to or less than the reported PCN can operate on the pavement subject to any limitations on the tire pressure.

7.9.1 Aircraft Classification Number Flexible Pavement

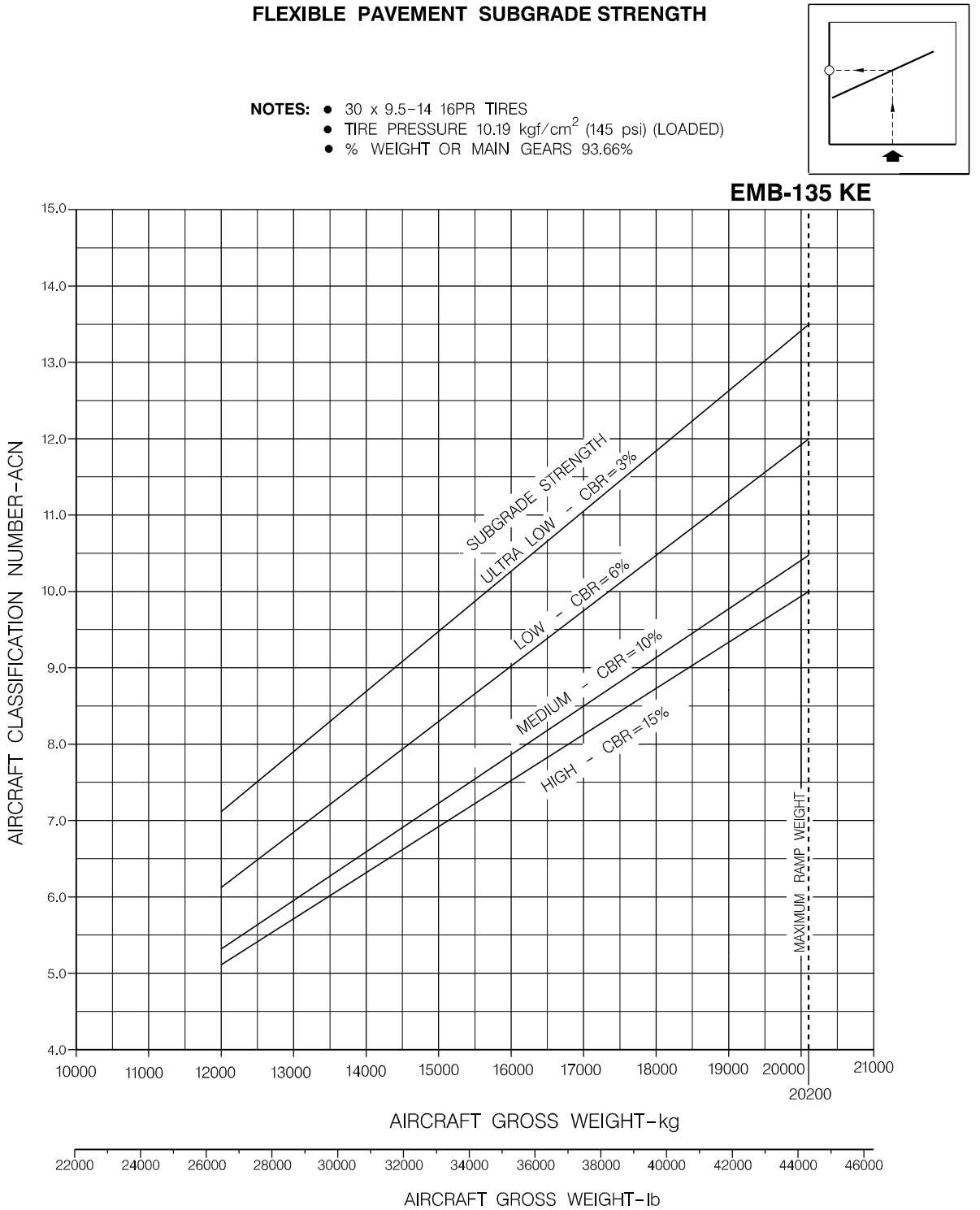

Figure 7.9.1 - Aircraft Classification Number Flexible Pavement Sheet 1

FLEXIBLE PAVEMENT SUBGRADE STRENGHT

NOTES:
- 30 x 9.5-16 16PR TIRES
- TIRE PRESSURE 10.76 kgf/cm^2 (153 psi) (LOADED)
- % WEIGHT OR MAIN GEARS 93,66 %

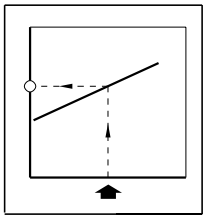

EMB 135 KL

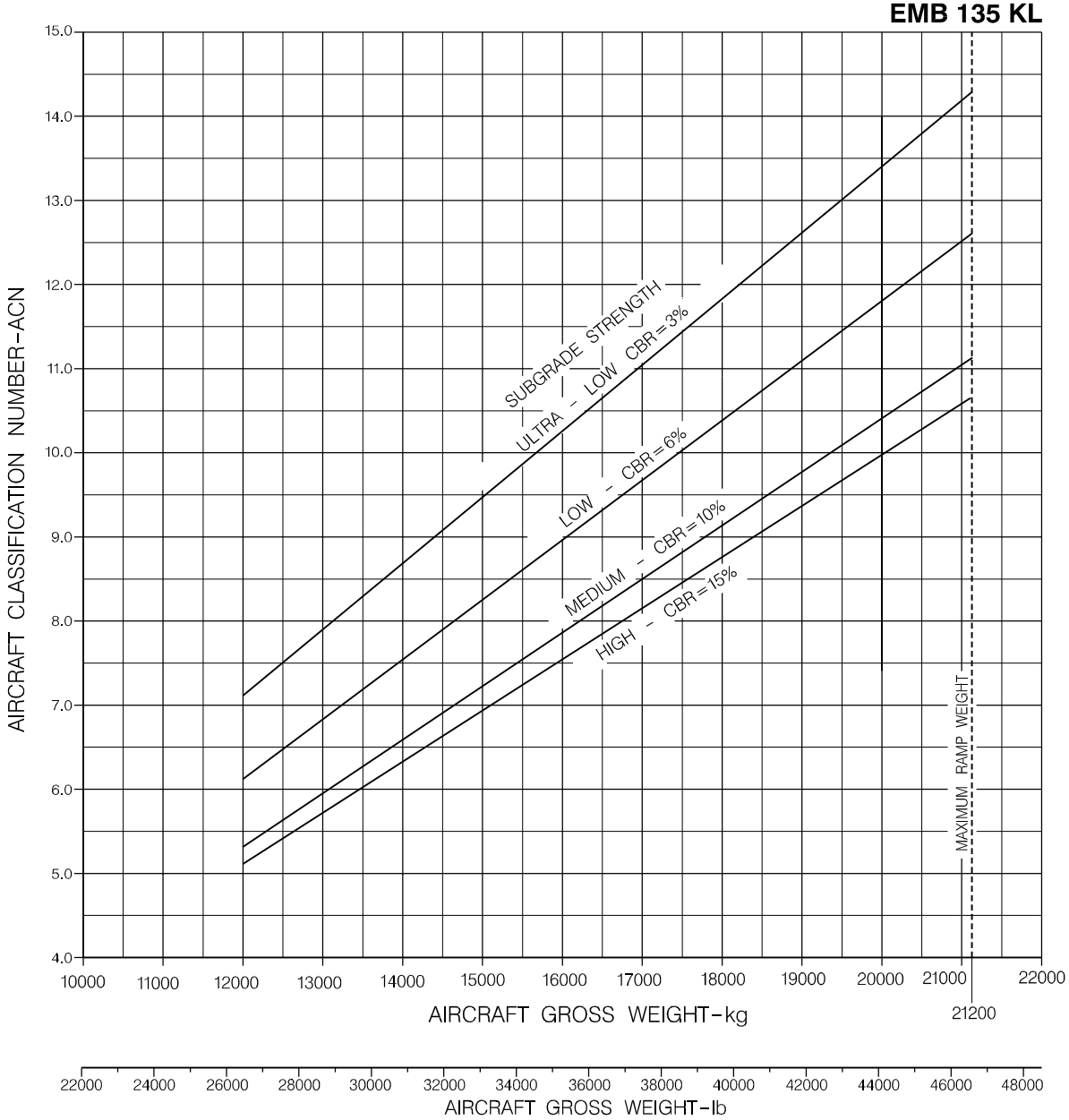

145APM070789.MCE B

Figure 7.9.1 - Aircraft Classification Number Flexible Pavement Sheet 2

7.9.2 Aircraft Classification Number Rigid Pavement

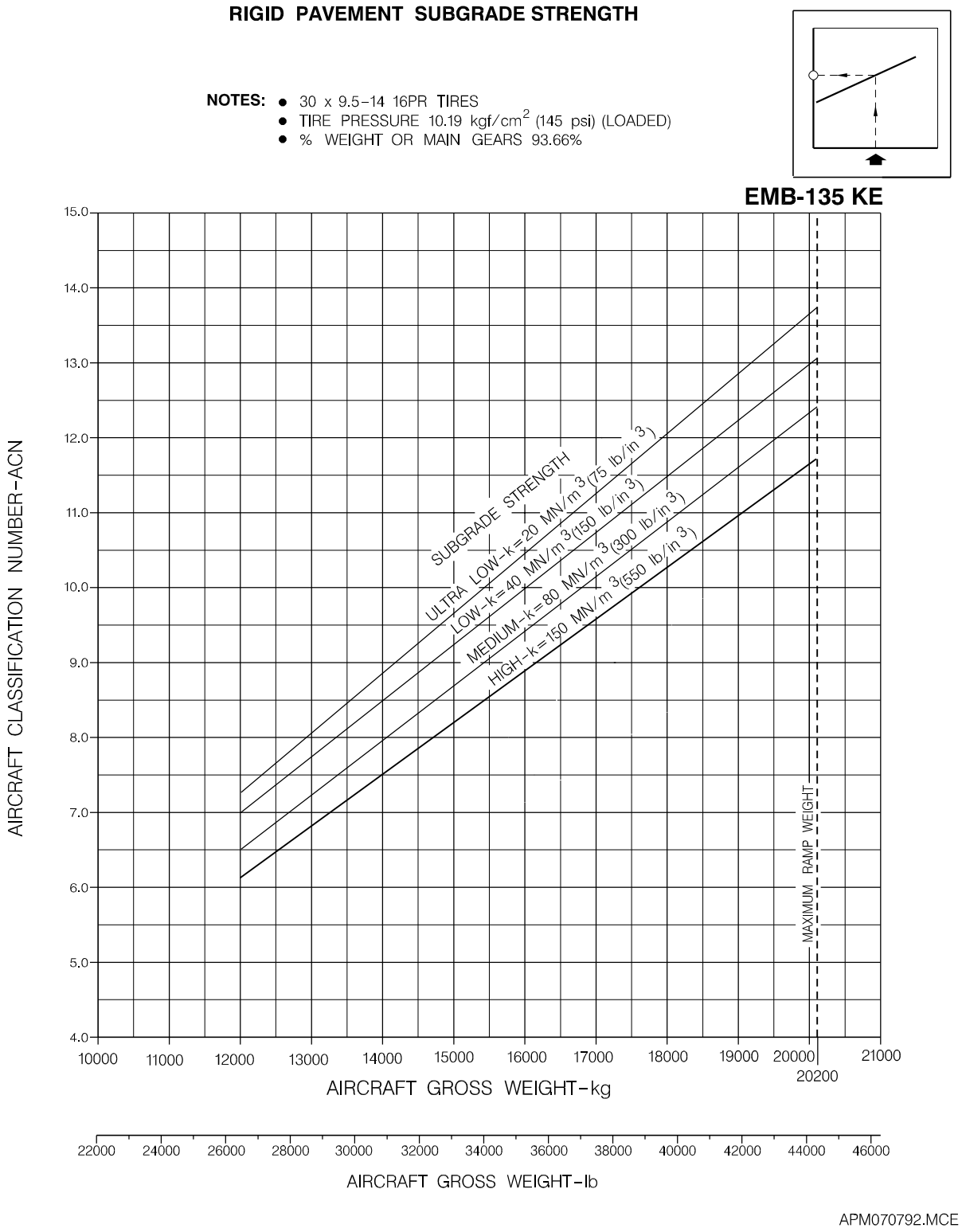

Figure 7.9.2 - Aircraft Classification Number Rigid Pavement
Sheet 1

RIGID PAVEMENT SUBGRADE STRENGTH

NOTES:
- 30 x 9.5-16 16PR TIRES
- TIRE PRESSURE 10,76 kgf/cm^2 (153 psi) (LOADED)
- % WEIGHT OR MAIN GEARS 93.66%

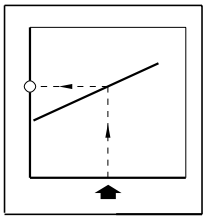

EMB-135 KL

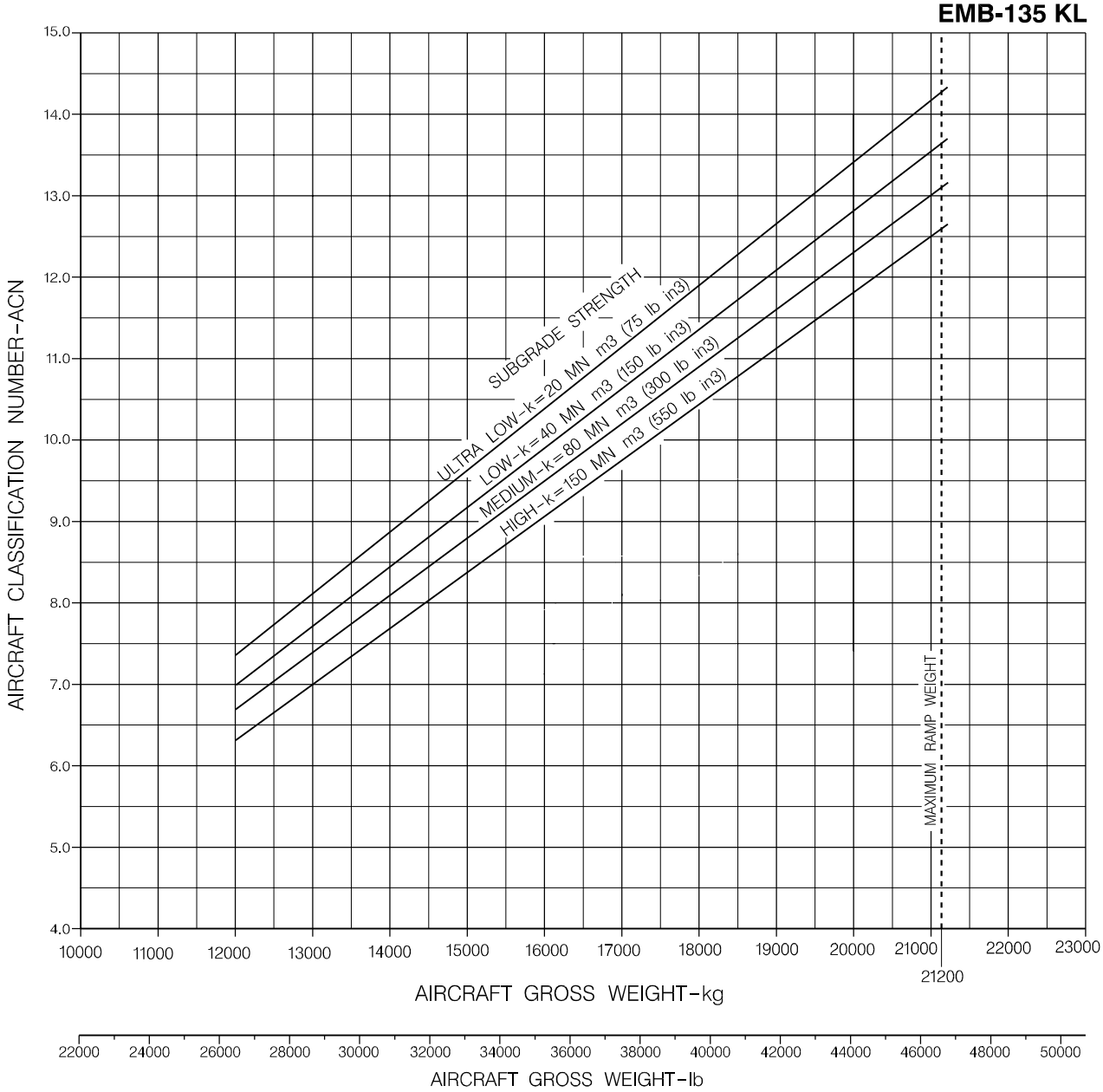

145APM070790.MCE A

Figure 7.9.2 - Aircraft Classification Number Rigid Pavement
Sheet 2

7.10 ACR - PCR METHOD

The ACR/PCR system as referenced in ICAO Annex 14, ″Aerodromes″, Volume I, ″Aerodrome Design and Operations″, 9th Edition, July 2022, provides a standardized international aircraft/pavement rating system. The ACR/PCR method is based on the concept of accumulated damage, expressed by the variable CDF (Cumulative Damage Factor). By definition, CDF is the portion of the estimated useful life of the pavement that was consumed through the fatigue process resulting from the repeated stresses imposed on the structure. The PCR is an index rating of the mass which an evaluation shows the pavement can withstand when applied by a standard single wheel. The ACR is established for the particular pavement type and subgrade category of the rated pavement as well as for the particular aircraft mass and characteristics. An aircraft must have an ACR equal to or less than the PCR to operate without restriction on the pavement. The calculation was done by means of the program ICAO-ACR v. 1.3.2, which calculates ICAO aircraft classification rating (ACR) numbers for aircraft operating on flexible and rigid airport pavements. The method follows Amendment 15 to ICAO Annex 14 replacing the legacy ACN-PCN system with ACR-PCR. The ACR system is similar in concept to ACN, with the following major differences:

- All structures are layered elastic (rigid and flexible). Alpha factors are not used.
- Retains 4 standard subgrade categories but defined by modulus E (not CBR or k).
- Flexible ACR considers all wheels in the main landing gear.
- Standard tire pressure increased to 1.5 MPa.
- Standard coverage increased to 36,500 for flexible ACR.
- Derived single wheel load (DSWL) is expressed in 100’s (not 1000’s) of kg. Note that ACR numerical values are approximately one order of magnitude higher than the equivalent ACN. This is intentional, to prevent confusion between the two systems.

The method of pavement evaluation is left to the airport with the results of their evaluation presented as follows:

7.10.1 ACR Calculation for EMB-135 KE

Table 7.10.1.1 - RESULTS OF ACR CALCULATION FOR EMB-135 KE

						ACR relative to							
						Rigid pavement subgrades				Flexible pavement subgrades			
Aircraft Type Tire Size MLG CL to CL Wheels CL to CL	Maximum Ramp Weight / Minimum Operating Weight		Load on one main gear leg	Standard aircraft unloaded tire pressure		High E = 200 MPa	Medium E = 120 MPa	Low E = 80 MPa	Ultra-low E = 50 MPa	High E = 200 MPa	Medium E = 120 MPa	Low E = 80 MPa	Ultra-low E = 50 MPa
EMB-135 KE	LB	KG	%	PSI	kPa	A	B	C	D	A	B	C	D
H30 x 9.5 -14 4.10 m 0.46 m	44,533	20,200	46.5	139	958	109.82	118.12	123.86	129.69	82.63	94.43	105.70	123.51
	26,455	12,000	45.6			56.00	60.76	64.31	68.16	46.72	51.53	55.42	61.39

FLEXIBLE PAVEMENT ACR NUMBER- EMB-135 KE

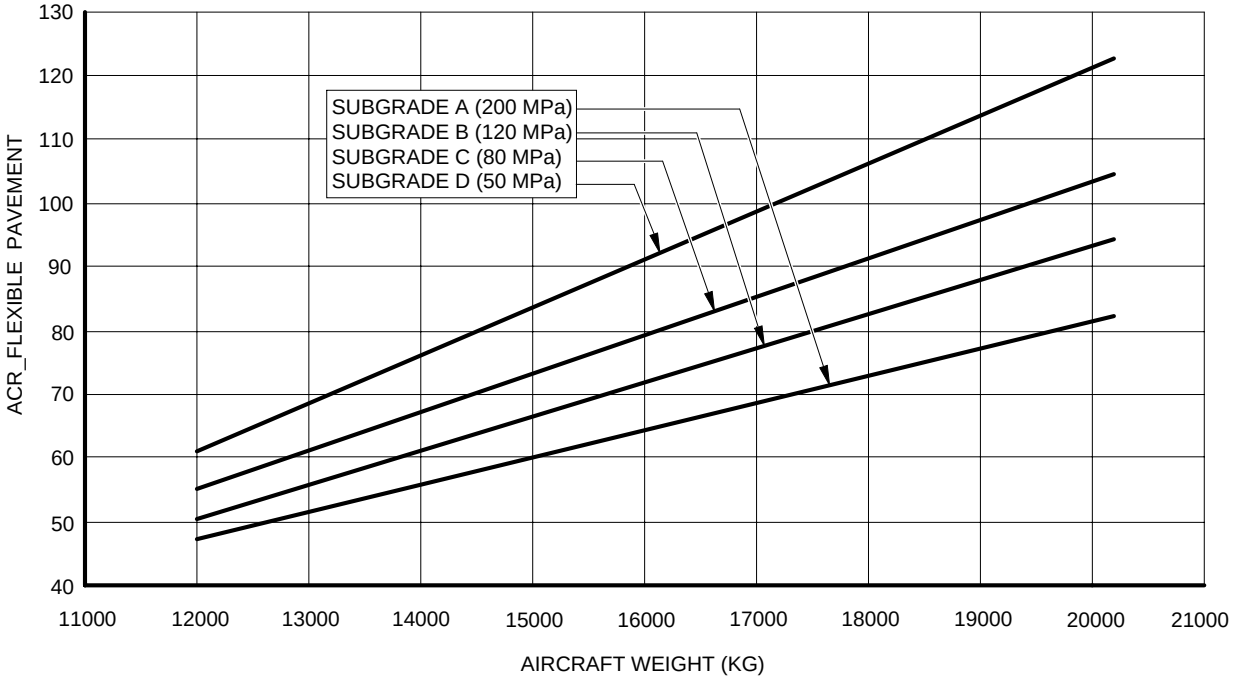

EM145APM074009.IDR

Figure 7.10.1 - Flexible Pavement

RIGID PAVEMENT ACR NUMBER- EMB-135 KE

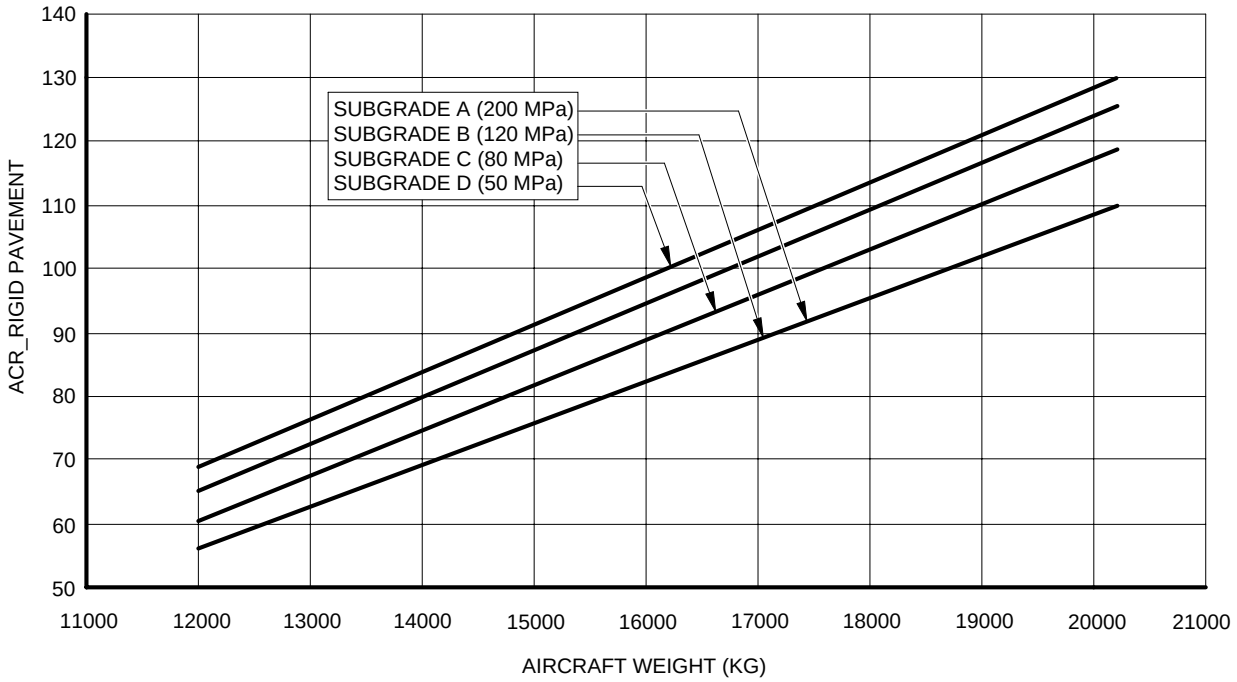

EM145APM074010.IDR

Figure 7.10.2 - Rigid Pavement

wipapm1521

7.11 ACR Calculation for EMB-135 KL

Table 7.11.2 - RESULTS OF ACR CALCULATION FOR EMB-135 KL

						ACR relative to							
Aircraft Type Tire Size MLG CL to CL Wheels CL to CL	Maximum Ramp Weight / Minimum Operating Weight		Load on one main gear leg	Standard aircraft unloaded tire pressure		Rigid pavement subgrades				Flexible pavement subgrades			
						High E = 200 MPa	Medium E = 120 MPa	Low E = 80 MPa	Ultra-low E = 50 MPa	High E = 200 MPa	Medium E = 120 MPa	Low E = 80 MPa	Ultra-low E = 50 MPa
EMB-135 KL H30 x 9.5 -14 4.10 m 0.46 m	LB	KG	%	PSI	kPa	A	B	C	D	A	B	C	D
	46,738	21,200	46.5	147	1014	118.97	127.21	132.89	138.66	89.20	101.28	113.00	132.50
	26,455	12,000	45.6			57.38	61.88	65.31	69.01	47.88	52.19	55.85	61.64

FLEXIBLE PAVEMENT ACR NUMBER- EMB-135 KL

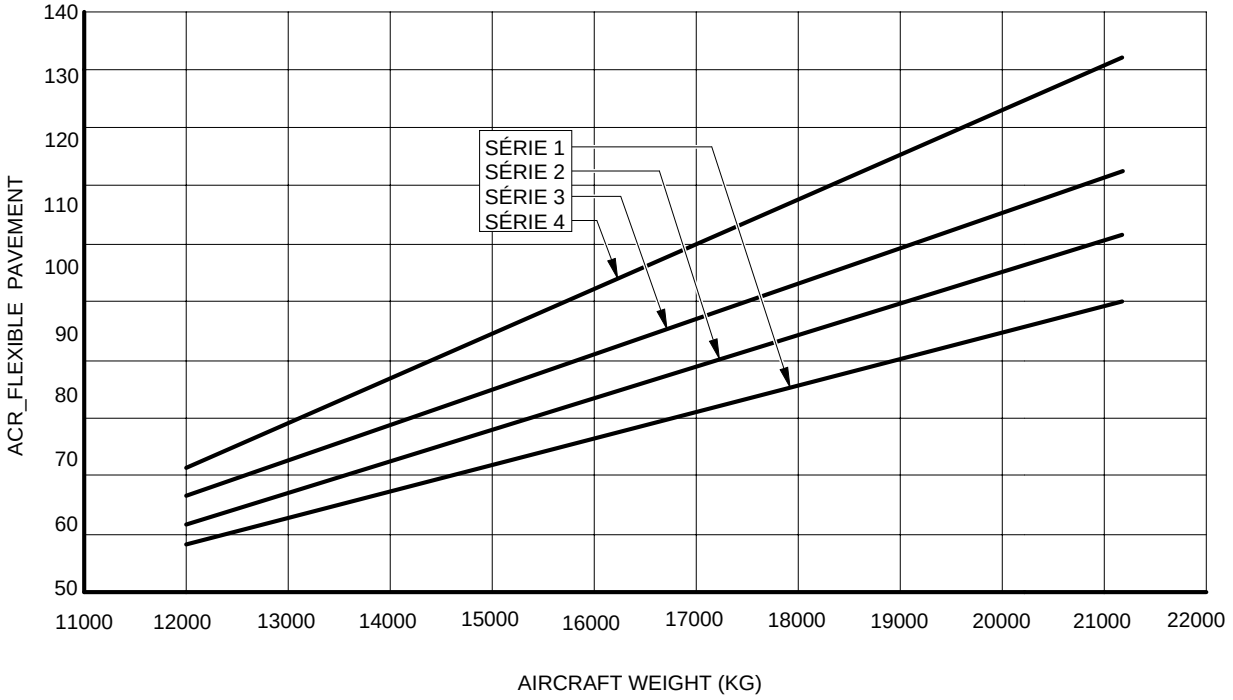

EM145APM074011.IDR

Figure 7.11.1 - Flexible Pavement

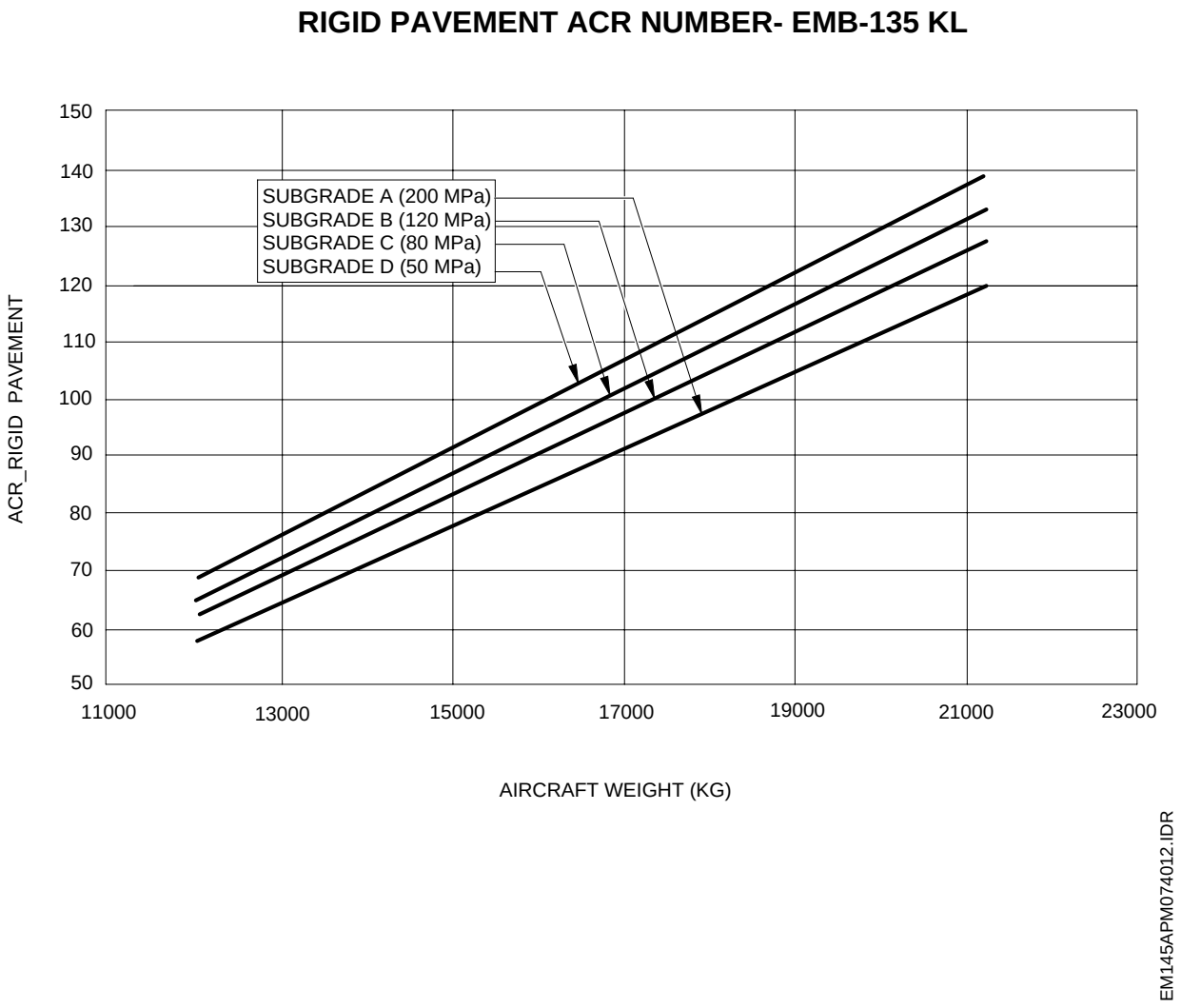

Figure 7.11.2 - Rigid Pavement

THIS PAGE LEFT BLANK INTENTIONALLY

8. POSSIBLE EMB-135 DERIVATIVE AIRPLANES

No derivative models of the EMB-135 are current planned.

THIS PAGE LEFT BLANK INTENTIONALLY

9. EMB-135 SCALE DRAWINGS

This section provides EMB-135 plan views to the following scales:

- English
  1 inch = 32 feet
  1 inch = 50 feet
  1 inch = 100 feet

- Metric
  1:500
  1:1000

9.1 EMB-135 Scale: 1 Inch Equals 32 Feet

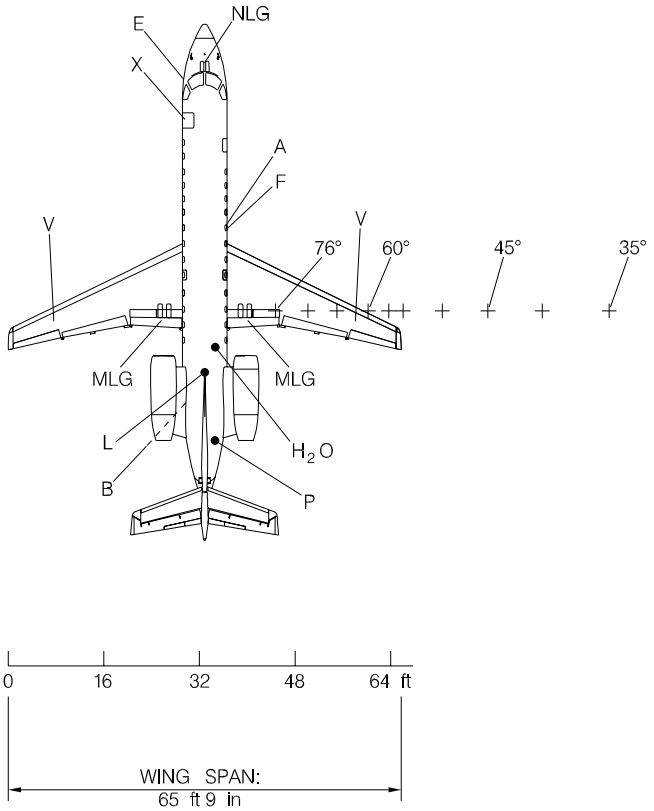

LEGEND:

A	AIR CONDITIONING
B	BAGGAGE DOOR
E	ELECTRICAL
F	FUEL
H_2O	POTABLE WATER
L	LAVATORY
MLG	MAIN LANDING GEAR
NLG	NOSE LANDING GEAR
P	PNEUMATIC
V	FUEL VENT
X	PASSENGER DOOR
+	TURNING RADIUS POINTS: 76°, 70°, 65°, 60°, 57°, 55°, 50°,45°,40°, 35°

APM090075.MCE A

Figure 9.1.1 - EMB-135 Scale: 1 Inch Equals 32 Feet

9.2 EMB-135 Scale: 1 Inch Equals 50 Feet

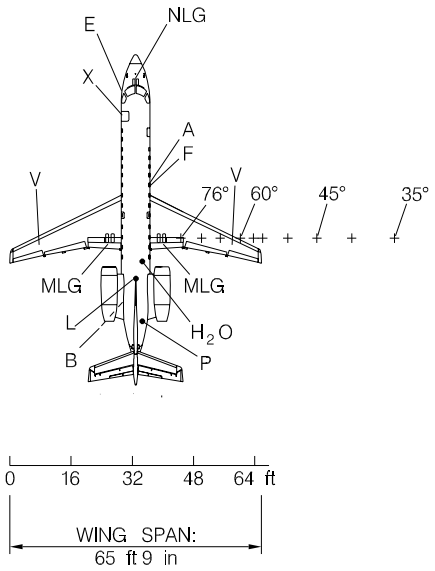

LEGEND:

A	AIR CONDITIONING
B	BAGGAGE DOOR
E	ELECTRICAL
F	FUEL
H_2O	POTABLE WATER
L	LAVATORY
MLG	MAIN LANDING GEAR
NLG	NOSE LANDING GEAR
P	PNEUMATIC
V	FUEL VENT
X	PASSENGER DOOR
+	TURNING RADIUS POINTS: 76°, 70°, 65°, 60°, 57°, 55°, 50°,45°,40°, 35°

APM090

Figure 9.2.1 - EMB-135 Scale: 1 Inch Equals 50 Feet

9.3 EMB-135 Scale: 1 Inch Equals 100 Feet

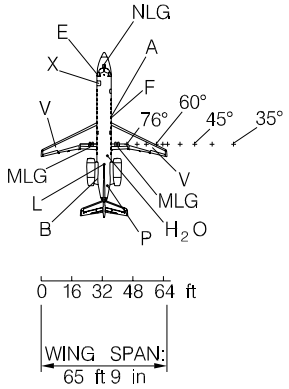

LEGEND:

A	AIR CONDITIONING
B	BAGGAGE DOOR
E	ELECTRICAL
F	FUEL
H_2O	POTABLE WATER
L	LAVATORY
MLG	MAIN LANDING GEAR
NLG	NOSE LANDING GEAR
P	PNEUMATIC
V	FUEL VENT
X	PASSENGER DOOR
+	TURNING RADIUS POINTS: 76°, 70°, 65°, 60°, 57°, 55°, 50°,45°,40°, 35°

APM090073.MCE A

Figure 9.3.1 - EMB-135 Scale: 1 Inch Equals 100 Feet

9.4 EMB-135 Scale: 1 to 500

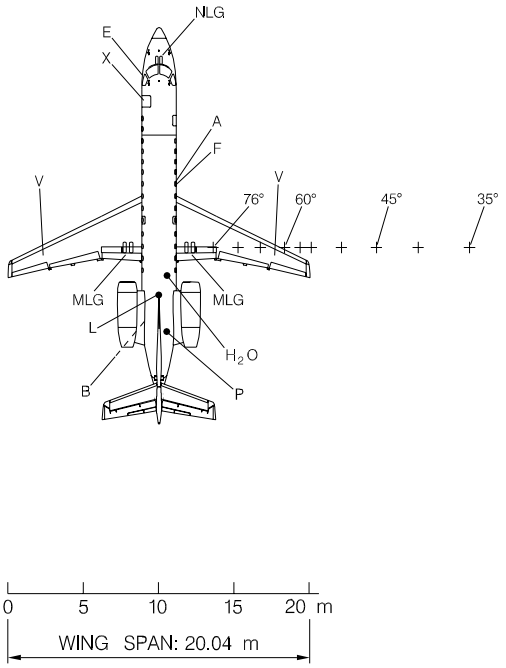

LEGEND:

A	AIR CONDITIONING
B	BAGGAGE DOOR
E	ELECTRICAL
F	FUEL
H_2O	POTABLE WATER
L	LAVATORY
MLG	MAIN LANDING GEAR
NLG	NOSE LANDING GEAR
P	PNEUMATIC
V	FUEL VENT
X	PASSENGER DOOR
+	TURNING RADIUS POINTS: 76°, 70°, 65°, 60°, 57°, 55°, 50°,45°,40°, 35°

APM090072.MCE A

Figure 9.4.1 - EMB-135 Scale: 1 to 500

9.5 EMB-135 Scale: 1 to 1000

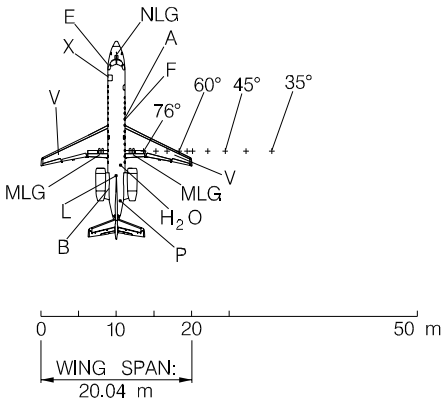

LEGEND:

A	AIR CONDITIONING
B	BAGGAGE DOOR
E	ELECTRICAL
F	FUEL
H_2O	POTABLE WATER
L	LAVATORY
MLG	MAIN LANDING GEAR
NLG	NOSE LANDING GEAR
P	PNEUMATIC
V	FUEL VENT
X	PASSENGER DOOR
+	TURNING RADIUS POINTS: 76°, 70°, 65°, 60°, 57°, 55°, 50°,45°,40°, 35°

APM090076.MCE A

Figure 9.5.1 - EMB-135 Scale: 1 to 1000

wipapm1521